5JMM5A-SUB-1A

TAG: _____

SUBMITTAL

Wall-Mount ECM Air Handler 2 – 3 Ton

5JMM5A0A24M21SA

5JMM5A0B30M21SA

5JMM5A0B36M31SA

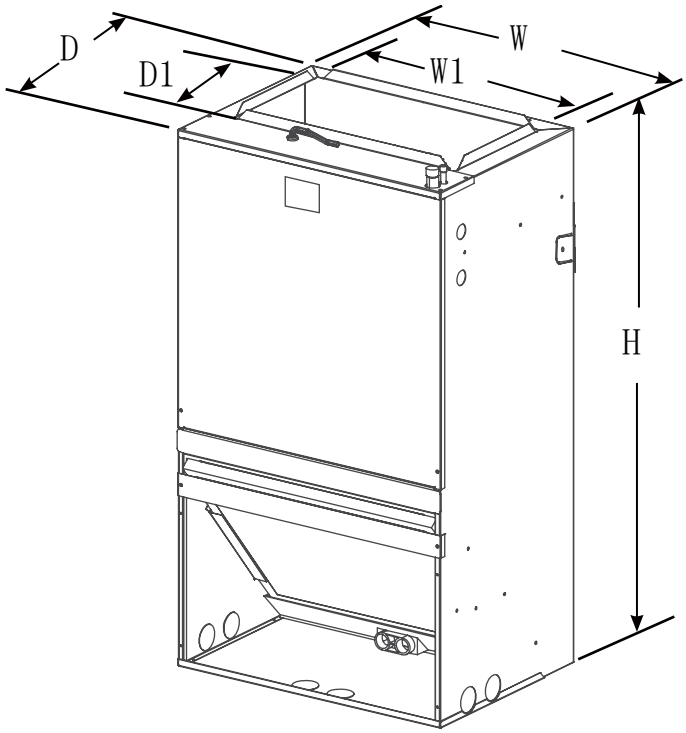

Dimensional and Clearance Data

MINIMUM UNIT CLEARANCE TABLE		
	TO COMBUSTIBLE MATERIAL (REQUIRED)	SERVICE CLEARANCE (RECOMMENDED)
SIDES	0"	0"
FRONT	0"	24"
BACK	0"	0"
INLET DUCT	0"	0"
OUTLET DUCT	0"*	
*0" FOR THE FIRST 3 FT. OF OUTLET DUCT WHEN ELECTRIC HEATERS ARE INSTALLED		

PRODUCT DIMENSIONS inch								Unit weight/ Shipping Weight LBS
Model	Height	Width	Width	Depth	Depth	Flow Control	Gas Line Braze	
	H	W	W1	D	D1			
5JMM5A0A24M21SA	36-1/2	20-1/2	17-2/5	15	9-1/2	TXV	3/4"	97/84
5JMM5A0B30M21SA	39-1/2	22	18-3/4	19	9-1/2	TXV	3/4"	117/99
5JMM5A0B36M21SA	39-1/2	22	18-3/4	19	9-1/2	TXV	3/4"	117/99

PRODUCT SPECIFICATIONS

MODEL	5JMM5A0A24M21SA	5JMM5A0B30M21SA	5JMM5A0B36M21SA
RATED VOLTS/PH/HZ.	208/230V/1Ph/60Hz	208/230V/1Ph/60Hz	208/230V/1Ph/60Hz
RATINGS	See O.D. Specifications	See O.D. Specifications	See O.D. Specifications
MINIMUM CIRCUIT AMPACITY	2.39	3.25	3.25
MAX FUSE OR MAX CKT.BKR.	15A	15A	15A
INDOOR COIL — Type	Plate Fin	Plate Fin	Plate Fin
Rows — F.P.I.	5-11	5-14	5-14
Face Area (sq. ft.)	2.20	3.00	3.00
Tube Size (in.)	9/32	9/32	9/32
Refrigerant Control	TXV	TXV	TXV
Drain Conn Size (in.)	3/4 FPT	3/4 FPT	3/4 FPT
DUCT CONNECTIONS	See Outline Drawing	See Outline Drawing	See Outline Drawing
INDOOR FAN — Type	Centrifugal	Centrifugal	Centrifugal
MOTOR— Type	ECM	ECM	ECM
Diameter-Width (In.)	10 - 6	10 - 9	10 - 9
No. Used	1	1	1
Drive - No Speeds	Direct - 5	Direct - 5	Direct - 5
CFM vs. in. w.g.	See Fan Performance Table	See Fan Performance Table	See Fan Performance Table
No. Motors — H.P.	1 - 1/3	1 - 1/2	1 - 1/2
Motor Speed R.P.M.	1050	1050	1050
Volts/Ph/Hz	208/230V/1Ph/60Hz	208/230V/1Ph/60Hz	208/230V/1Ph/60Hz
F.L. Amps	1.9	2.7	2.7
FILTER			
Filter Furnished?	No	No	No
Type Recommended	Throwaway	Throwaway	Throwaway
No.-Size-Thickness	1 - 16x20 - 1 in.	1 - 16x20 - 1 in.	1 - 16x20 - 1 in.
REFRIGERANT	R454B	R454B	R454B
Ref. Line Connections	Brazed	Brazed	Brazed
Coupling or Conn. Size-in. GAS	3/4	3/4	3/4
Coupling or Conn. Size-in. Liq.	3/8	3/8	3/8
DIMENSIONS	W x H x D	W x H x D	W x H x D
Crated (In.)	22-13/16× 41-3/4× 17-3/16	24-3/16× 44-7/8× 21-1/4	24-3/16× 44-7/8× 21-1/4
Uncrated	20-1/2× 36-1/2×15	22× 39-1/2×19	22× 39-1/2×19
RATED SOUND POWER LEVEL(dB)	65	63	67
WEIGHT			
Shipping (Lbs.)/ Net (Lbs.)	97/84	117/99	117/99

Oxbox R454B 2023 Models	Sound Power Level
5JMM5A0A24M21SA	65
5JMM5A0B30M21SA	63
5JMM5A0B36M21SA	67

Performance and Electrical Data – 5JMM5A0A24–B36

AIR FLOW PERFORMANCE (Standard CFM)

Ton	BLOWER SPEEDS	EXTERNAL STATIC PRESSURE (in.w.c.)								
		0	0.1	0.2	0.3	0.4	0.5	0.6	0.7	0.8
2	Tap (1)	584	541	487	441	416	357	359	299	253
	Tap (2)	662	615	582	542	514	467	427	385	351
	Tap (3)	710	683	645	619	579	535	490	458	416
	Tap (4)	803	769	742	710	675	642	609	572	534
	Tap (5) -Factory	899	871	836	810	789	758	719	689	646
2-1/2	Tap (1)	1063	1012	936	898	853	823	780	740	701
	Tap (2)	1133	1080	1026	991	958	904	858	813	769
	Tap (3) -Factory	1220	1194	1111	1100	1060	1007	952	910	855
	Tap (4)	1234	1200	1146	1229	1088	1046	1004	951	917
	Tap (5)	1341	1310	1247	1225	1192	1151	1101	1077	1033
3	Tap (1)	1063	1012	936	898	853	823	780	740	701
	Tap (2)	1133	1080	1026	991	958	904	858	813	769
	Tap (3)	1220	1194	1111	1100	1060	1007	952	910	855
	Tap (4) -Factory	1234	1200	1146	1229	1088	1046	1004	951	917
	Tap (5)	1341	1310	1247	1225	1192	1151	1101	1077	1033

NOTES:

1. Shaded boxes represent airflow outside the required 300-450 cfm/ton.
2. Airflow based upon dry coil at 230V with no electric heat, no filter.

5JMM5A0A24M21SA - ELECTRICAL DATA						
Heater Model No	No. of Circuits/ Phases	Electric Heat(kW)	Min. Circuit Ampacity		Max. Fuse or Breaker (HACR)Ampacity	
			240V	208V	240V	208V
5JAYHTR1J05BK*	1/1	5	25	28.5	30	30
5JAYHTR1J08BK*	1/1	7.5	36.3	41.5	50	50
5JAYHTR1J10BK*	1/1	10	47.6	54.5	60	60

5JMM5A0B30M21SA - ELECTRICAL DATA						
Heater Model No	No. of Circuits/ Phases	Electric Heat(kW)	Min. Circuit Ampacity		Max. Fuse or Breaker (HACR)Ampacity	
			240V	208V	240V	208V
5JAYHTR1J05BK*	1/1	5	26	29.5	30	30
5JAYHTR1J08BK*	1/1	7.5	37.3	42.5	50	50
5JAYHTR1J10BK*	1/1	10	48.6	55.5	60	60

5JMM5A0B36M21SA - ELECTRICAL DATA						
Heater Model No	No. of Circuits/ Phases	Electric Heat(kW)	Min. Circuit Ampacity		Max. Fuse or Breaker (HACR)Ampacity	
			240V	208V	240V	208V
5JAYHTR1J05BK*	1/1	5	26	29.5	30	30
5JAYHTR1J08BK*	1/1	7.5	37.3	42.5	50	50
5JAYHTR1J10BK*	1/1	10	48.6	55.5	60	60

Mechanical Specifications

STANDARD FEATURES

- Front or bottom return air
- Painted finish on galvanized steel
- Sturdy polycarbonate drain pans
  - The 5JMM5 wall mount air handler a has factory installeddrain pan and is shipped for upflow applications only.
- 208/230 - VAC operation
- Multi-speed direct drive blower
  - PSC motor
- Stud or wall mounting tabs
- Fully insulated cabinet
- 3/4" FPT primary and secondary drains
- Factory installed orifice
- **All - aluminum tubes & fins**

OPTIONAL ACCESSORIES

- 5, 7.5 and 10 kW single phase electric heaters
  - Circuit breakers are standard on all single phase 5, 7.5 and 10 kW heaters.
- Front louver panel 20.5" width - BAYFRTLOUPNL20 (1-Pack)
- Front louver panel 22" width - BAYFRTLOUPNL22 (1-Pack)
- Return air / service wall panel - BAYTMMWALLPNL1 (20-Pack)
- Return air / service wall panel - BAYTMMWALLPNLS (1-Pack)







OXBOX™
A TRANE® BRAND

The Manufacturer has a policy of continuous product and product data improvement and reserves the right to change design and specifications without notice.