INSTALLATION MANUAL

High Efficiency Upflow/Horizontal Gas Furnaces
J962V* Series

Thank you very much for purchasing our product,
Before using your unit , please read this manual carefully and keep it for future reference.
The figure shown in this manual is for reference only and may be slightly different from the actual product.

⚠ WARNING

FIRE OR EXPLOSION HAZARD

Failure to follow safety warnings exactly could result in serious injury death or property damage.

—— Do not store or use gasoline or other flammable vapors and liquids in the vicinity of this or any other appliance..

—— WHAT TO DO IF YOU SMELL GAS

- Do not try to light any appliance.
- Do not touch any electrical switch; do not use any phone in your building.
- Leave the building immediately.
- Immediately call your gas supplier from a neighbor's phone. Follow the gas supplier's instructions.
- If you cannot reach your gas supplier, call the fire department.

—— Installation and service must be performed by a qualified installer, service agency or the gas supplier.

NOTE

Do not use this furnace if any part has been under water. A flood-damaged furnace is extremely dangerous. Attempts to use the furnace can result in fire or explosion. A qualified service agency should be contacted to inspect the furnace and to replace all gas controls, control system parts, electrical parts that have been wet or the furnace if deemed necessary.

CONTENTS

1 SAFETY CONSIDERATIONS 01

2 INTRODUCTION 04

3 CODES AND STANDARDS

- 3.1 Safety 05
- 3.2 General Installation 05
- 3.3 Combustion and Ventilation Air 05
- 3.4 Duct Systems 05
- 3.5 Acoustical Lining and Fibrous Glass Duct 05
- 3.6 Gas Piping and Gas Pipe Pressure Testing 05
- 3.7 Electrical Connections 05
- 3.8 Electrical Power Supply 05
- 3.9 Venting 05

4 ELECTROSTATIC DISCHARGE (ESD) PRECAUTIONS PROCEDURE 06

5 LOCATION 06

6 INSTALLATION

- 6.1 Upflow Installation 08
- 6.2 Horizontal Installation 09
- 6.3 Condensate Line and Over Flow Pressure Switch 10
- 6.4 Filter Arrangement 15
- 6.5 Air Duct 15
- 6.6 Airflow Adjustments 18
- 6.7 Circulator Blower Speed Adjustment 19

7 COMBUSTION AIR AND VENT SYSTEM

- 7.1 Combustion Air and Vent Safety 19
- 7.2 Combustion Air/Vent Pipe Sizing 20
- 7.3 Combustion Air and Vent Piping Assembly 21
- 7.4 Combustion Air/Venting 21
- 7.5 Vent System 23
- 7.6 Combustion & Ventilation Air Requirements 24

8 GAS SUPPLY AND PIPING

- 8.1 General 27
- 8.2 High Altitude Derate 28
- 8.3 Propane Gas Conversion 28
- 8.4 Gas Piping Connections 29
- 8.5 Gas Piping Checks 30

9 ELECTRICAL CONNECTIONS

- 9.1 115V Wiring 30
- 9.2 Electrical Connection To J-box 31
- 9.3 Power Cord Installation In Furnace J-box 32
- 9.4 Bx Cable Installation In Furnace J-box 32
- 9.5 24V Wiring 32
- 9.6 Accessories (Field Supplied) 32
- 9.7 Grounding 32
- 9.8 R454B Leak Mitigation Kit for use with Furnace and Condensing Units 34

10 START-UP, ADJUSTMENT, AND SAFETY CHECK

- 10.1 General 35
- 10.2 Start-Up Procedures 35
- 10.3 Furnace Start-up 35
- 10.4 Sequence of Operation 36
- 10.5 Gas Manifold Pressure Measurement And Adjustment 38
- 10.6 Gas Input Rate Measurement (Natural Gas Only) 38
- 10.7 Temperature Rise Adjustment 39

11 OPERATIONAL CHECKS 39

12 SAFETY CIRCUIT DESCRIPTION

- 12.1 General 39
- 12.2 Integrated Control Module 39
- 12.3 Primary Limit 40
- 12.4 Rollout Limits 40
- 12.5 Reverse Flow Limits 40
- 12.6 Overflow Protection Pressure Switch(Overflow Switch) 40
- 12.7 Pressure Switches 40
- 12.8 Flame Sensor 40

13 TROUBLESHOOTING

- 13.1 Electrostatic Discharge (ESD) Precautions 40
- 13.2 Diagnostic Chart 40
- 13.3 Resetting From Lockout 41

14 SERVICE AND MAINTENANCE PROCEDURES

- 14.1 Annual Inspection 42
- 14.2 Filters 42
- 14.3 Induced Draft And Circulating Blower Motors 42
- 14.4 Flame Sensor (Qualified Servicer Only) 43
- 14.5 Burners 43
- 14.6 Condensate Trap And Drain System(Qualified Servicer Only) 43
- 14.7 Before Leaving An Installation 43
- 14.8 Repair And Replacement Parts 43

15 WIRING DIAGRAMS 45

Accessories List

No.	Item	Contains	Part Number	Reference Page
1	LP Conversion Kit	LP springs, orifices, and conversion labels	Shipped with unit	Chapter 8.3, Page 28
2	High Altitude Kit	#47 & #48 Natural gas orifices for higher altitudes #56 & #57 Propane gas orifices for higher altitudes	JAYHAKFURN962XA	Chapter 8.2, Page 28

These furnaces comply with requirements embodied in the American National Standard / National Standard of Canada ANSI Z21.47·CSA-2.3 Gas Fired Central Furnaces.

⚠ WARNING

FIRE OR EXPLOSION HAZARD

The furnace is designed and approved for use with Natural Gas and (LP) Propane Gas ONLY. DO NOT BURN ANY LIQUID FUEL OR SOLID FUEL IN THIS FURNACE.
Burning any unapproved fuel will result in damage to the furnace heat exchanger, which could result in Fire, Personal Injury, and/or Property Damage.

⚠ WARNING

Proposition 65: This appliance contains fiberglass insulation.
Respirable particles of fiberglass are known to the state of California to cause cancer. For more information, go to www.P65Warnings.ca.gov.”

1 SAFETY CONSIDERATIONS

DANGER identifies the most serious hazards which will result in severe personal injury or death.

WARNING signifies hazards which could result in personal injury or death. CAUTION is used to identify unsafe practices which may result in minor personal injury or product and property damage. NOTE is used to highlight suggestions which will result in enhanced installation, reliability, or operation.

⚠ WARNING

FIRE, EXPLOSION, ELECTRICAL SHOCK, AND CARBON MONOXIDE POISONING HAZARD

Failure to follow this warning could result in dangerous operation, serious injury, death, or property damage. Improper installation, adjustment, alteration, service, maintenance, or use could cause carbon monoxide poisoning, explosion, fire, electrical shock, or other conditions which may cause personal injury or property damage. Consult a qualified service agency, local gas supplier, or your distributor or branch for information or assistance. The qualified service agency must use only factory-authorized and listed kits or accessories when modifying this product.

⚠ CAUTION

FURNACE RELIABILITY HAZARD

Improper installation or misapplication of furnace may require excessive servicing or cause premature component failure.
Application of this furnace should be indoors with special attention given to vent sizing and material, gas input rate, air temperature rise, unit leveling, and unit sizing.

CUT HAZARD

Failure to follow this caution may result in personal injury.
Sheet metal parts may have sharp edges or burrs. Use care and wear appropriate protective clothing, safety glasses and gloves when handling parts and servicing furnaces.

Improper installation, adjustment, alteration, service, maintenance, or use can cause explosion, fire, electrical shock, or other conditions which may cause death, personal injury, or property damage. Consult a qualified installer, service agency, or your distributor or branch for information or assistance. The qualified installer or agency must use factory-authorized kits or accessories when modifying this product. Refer to the individual instructions packaged with the kits or accessories when installing.

Follow all safety codes, wear safety glasses, protective clothing, and work gloves. Have a fire extinguisher available. Read these instructions thoroughly and follow all warnings or cautions include in literature and attached to the unit. Consult local building codes, the current editions of the National Fuel Gas Code (NFGC) NFPA 54/ANSI Z223.1 and the National Electrical Code (NEC) NFPA 70.

In Canada, refer to the current editions of the National Standards of Canada CAN/CSA-BI49.1 and .2 Natural Gas and Propane Installation Codes, and Canadian Electrical Code CSA C22.1

Recognize safety information. This is the safety-alert symbol . When you see this symbol on the unit and in instructions or manuals, be alert to the potential for personal injury. Understand the signal words DANGER, WARNING, and CAUTION. These words are used with the safety-alert symbol.

- Use only with the type of gas approved for this furnace. Refer to the furnace rating plate.
- Install this furnace only in a location and position as specified in the "Location" section of these instructions.
- Provide adequate combustion and ventilation air to the furnace space as specified in "Combustion Air and Vent System" section.
- Combustion products must be discharged outdoors. Connect this furnace to an approved vent system only, as specified in the "Vent System" section of these instructions.
- Never test for gas leaks with an open flame. Use a commercially available soap solution made specifically for the detection of leaks to check all connections, as specified in the "Gas Supply and Piping" section.
- Always install furnace to operate within the furnace's intended temperature-rise range with a duct system which has an external static pressure within the allowable range, as specified in the "Start-Up, Adjustments, and Safety Check" section. See furnace rating plate.
- When a furnace is installed so that supply ducts carry air circulated by the furnace to areas outside the space containing the furnace, the return air shall also be handled by duct(s) sealed to the furnace casing and terminating outside the space containing the furnace. See "Air Ducts" section.
- A gas-fired furnace for installation in a residential garage must be installed as specified in the warning box in the "Location" section.
- The furnace may be used for construction heat provided that the furnace installation and operation complies with the first CAUTION in the LOCATION section of these instructions.
- These multipoise Gas-Fired Furnaces are CSA (formerly A.G.A. and C.G.A) design-certified for use with natural and propane gases (see furnace rating plate) and for installation in alcoves, attics, basements, closets, utility rooms, crawlspaces, and garages. The furnace is factory-shipped for use with natural gas. An ETL listed accessory gas conversion kit is required to convert furnace for use with propane. The accessory kit ships with every unit from the factory.
- The furnaces must be kept free and clear of insulating materials. Inspect surrounding area to ensure insulation material is in safe distance when installing furnaces or adding insulation materials. Insulation materials may be combustible.

- See Fig. 2-1 for required clearances to combustible construction.
- Maintain a 1 in (25 mm) clearance from combustible materials to supply air ductwork for a distance of 36 in (914 mm) horizontally from the furnace. See NFPA 90B or local code for further requirements.
- These furnaces SHALL NOT be installed directly on carpeting, tile, or any other combustible material other than wood flooring.
- Following instruction of lighting/ shutdown operation. Should the gas supply fail to shut off or if overheating occurs, shut off the gas valve to the furnace before shutting of the electrical supply.
- Before heating season begins, check the furnace to determine that:
  a. All flue gas carrying areas external to the furnace (i.e. chimney, vent connector) are clear and free of obstructions.
  b. The vent connector is in place, slopes upward and is physically sound without holes or exccessive corrosion.
  c. The return-air duct connection(s) is physically sealed to the furnace casing, and terminates outside the space containing the furnace.
  d. The physical support of the furnace is without sagging, cracks, gaps, etc around the base so as to provide a seal between the support and the base.
  e. There are no obvious sign of deterioration of the furnace.
  f. The burner flames are in good adjustment (by comparison with pictorial sketches of the main burner flame (see Fig 31).
- Furnace operation needs air for combustion and ventilation.
  Do not block or obstruct air openings on furnace or spacing around furnace required for supplying sufficient combustion air and ventilation.

Cover old lighting instructions with this label. Note: Rating plate must be left visible for future reference.

FOR YOUR SAFETY READ BEFORE OPERATING

⚠WARNING If you do not follow these instructions exactly, a fire or explosion may result causing property damage, personal injury or loss of life.

A. This appliance does not have a pilot. it is equipped with an ignition device which automatically lights the burner. **Do not** try to light the burner by hand.

B. **BEFORE OPERATING** smell all around the appliance area for gas. Be sure to smell next to the floor because some gas Is heavier than air and will settle on the floor.

FOR YOUR SAFETY
"WHAT TO DO IF YOU SMELL GAS"

- Do not try to light any appliance.
- Do not touch any electrical switch; do not use any phone in your building.
- Immediately call your gas supplier from a neighbors phone. Follow the gas suppliers instructions.
- If you cannot reach your gas supplier, call the fire department.

C. Use only your hand to turn the gas control switch. Never use tools. If the switch will not turn by hand, don't try to repair it; call a qualified service technician. Force or attempted repair may result in a fire or explosion.

D. Do not use this appliance if any part has been under water. Immediately call a qualified service technician to inspect the appliance and to replace any part of the control system and any gas control which has been under water.

OPERATING INSTRUCTIONS

1. STOP! Read the safety information above on this label.
2. Set the thermostat to lowest setting.
3. Turn off all electric power to the appliance.
4. This appliance is equipped with an ignition device which automatically lights the burner. Do not try to light the burner by hand.

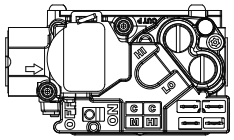

SWITCH SHOWN IN THE "OFF" POSITION

More details please see Fig.10-1

5. Remove control access panel.
6. Wait five (5) minutes to clear out any gas. if you then smell gas, STOP! Follow "B" in the safety information above on this label. If you don't smell gas, go to the next step.
7. Push gas control switch to "ON".
   NOTE: Do not force.
8. Replace control access panel.
9. Turn on all electric power to the appliance.
10. Set thermostat to desired setting
11. If the appliance will not operate, follow instructions "To Turn Off Gas To Appliance" and call your service technician or gas supplier.

TO TURN OFF GAS TO APPLIANCE

1. Set the thermostat to lowest setting.
2. Turn off all electric power to the appliance if service is to be performed.
3. Remove control access panel.
4. Push gas control to "OFF". Do not force.
5. Replace control access panel.

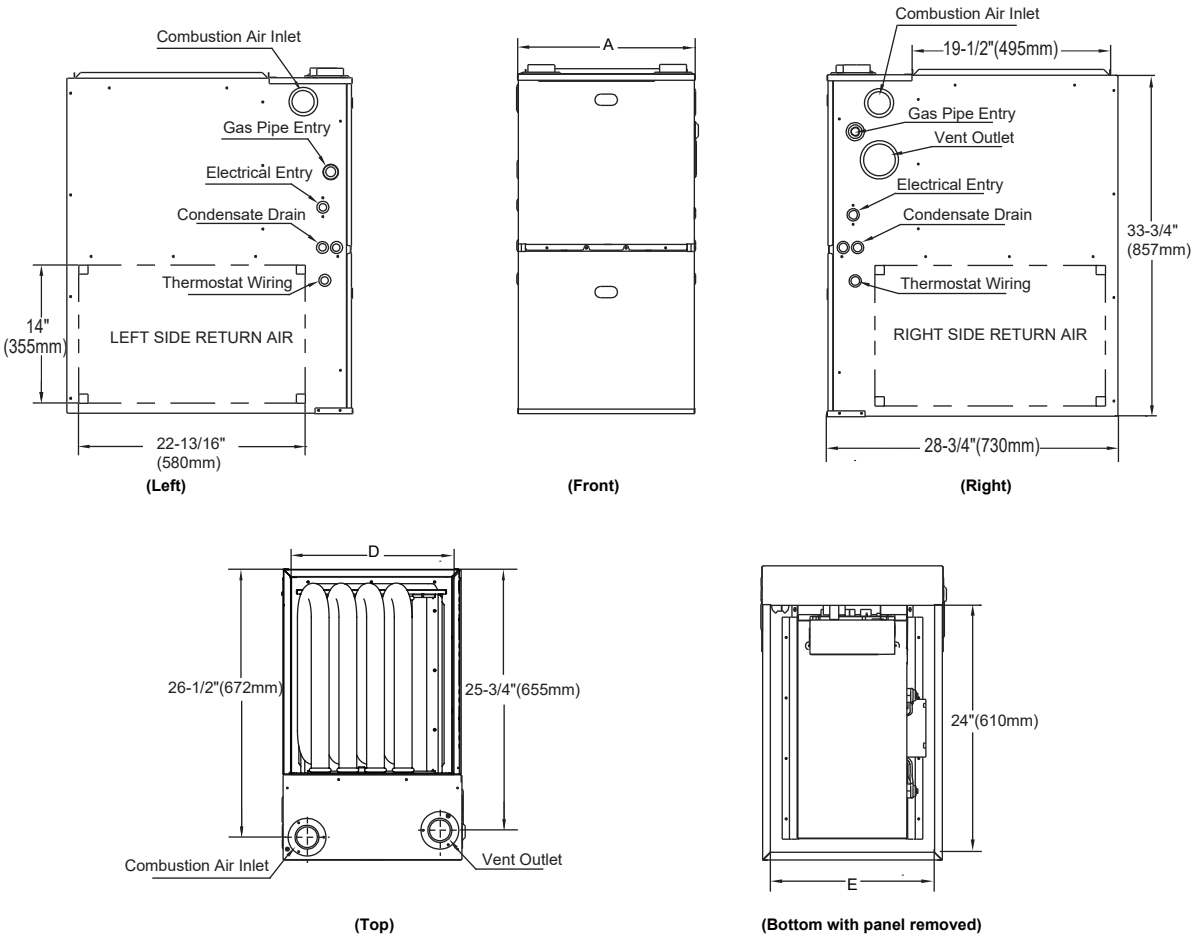

Fig. 1-1 Dimensional Drawing

Table 1-1 Dimensions

FURNACE SIZE	A CABINET WIDTH in (mm)	D SUPPLY AIR WIDTH in (mm)	E RETURN AIR WIDTH in (mm)	NET/SHIP WT (lbs)
60B	17.5 (445)	16 (406)	15-27/32 (402)	130/147.5
80B	17.5 (445)	16 (406)	15-27/32 (402)	139.5/152
80C	21 (533)	19.5 (495)	19-13/32 (493)	151/165
100C	21 (533)	19.5 (495)	19-13/32 (493)	153/170.5
100D	24.5 (622)	23 (584)	22-27/32 (580)	160.5/181.5
120D	24.5 (622)	23 (584)	22-27/32 (580)	166/187

2 INTRODUCTION

This series 3-way multipoise Category IV fan-assisted furnace is ETL design-certified. A Category IV fan-assisted furnace is an appliance equipped with an integral mechanical means to force products of combustion through the combustion chamber and/or heat exchanger.

The furnace is factory-shipped for use with natural gas.

This furnace is not approved for installation in mobile homes, recreational vehicles, or outdoors. This furnace is designed for minimum continuous return-air temperature of 60°F (16°C) dry bulb or intermittent operation down to 55°F (13°C) dry bulb such as when used with a night setback thermostat. Return-air temperature must not exceed 85°F (29°C) dry bulb. Failure to follow these return-air temperature limits may affect reliability of heat exchangers, motors, and controls. (See Fig. 3).

For accessory installation details, refer to the applicable instruction literature.

NOTE

Remove all shipping brackets and materials before operating the furnace.

INSTALLATION

This forced air furnace is equipped for use with natural gas at altitudes 0 - 10,000 ft(0-3,050m).

An accessory kit, supplied by the manufacturer, shall be used to convert to propane gas user or may be required for some natural gas applications.

This furnace is for indoor installation in a building constructed on site. This furnace may be installed on combustible flooring in alcove or closet at Minimum Inches Clearance To Combustible Construction as described below.

This furnace requires a special venting system. Refer to the installation instructions for parts list and method of installation. In the US this furnace is for use with schedule-40 PVC, PVC-DWV, CPVC, or ABS-DWV pipe, and must not be vented in common with other gas-fired appliances. In Canada, refer to installation instructions for vent materials. Construction through which vent/air intake pipes may be installed is maximum 24 inches (610mm), minimum 3/4 inches (19mm) thickness (including roofing materials).

For upflow and horizontal application, the furnace must be pitched minimum 1/2" (12.7mm) to maximum of 3/4" (19mm) forward for proper drainage.

See the section “INSTALLATION” of this manual.

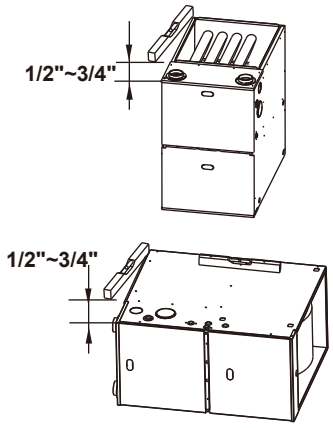

This furnace is approved for UPFLOW, and HORIZONTAL installations.

Clearance arrows do not change with furnace orientation.

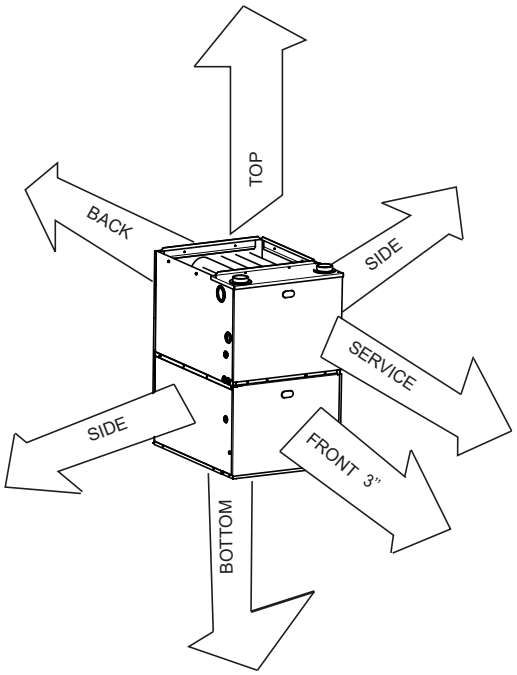

MINIMUM INCHES CLEARANCE TO COMBUSTIBLE CONSTRUCTION

ALL POSITIONS:

* Minimum front clearance for service 24 inches (610mm).

HORIZONTAL INSTALLATION IN ATTIC

Line contact only permissible between lines formed by intersections of the Top and two Sides of the furnace jacket, and building joists, studs or framing.

3 CODES AND STANDARDS

Follow all national and local codes and standards in addition to these instructions. The installation must comply with regulations of the serving gas supplier, local building, heating, plumbing, and other codes. In absence of local codes, the installation must comply with the national codes listed below and all authorities having jurisdiction. In the United States and Canada, follow all codes and standards for the following:

3.1 Safety

- US: National Fuel Gas Code (NFGC) NFPA 54/ANSI Z223.1 and the Installation Standards, Warm Air Heating and Air Conditioning Systems ANSI/NFPA 90B
- CANADA: National Standard of Canada Natural Gas and Propane Installation Codes (CAN/CSA -B149. 1-05)

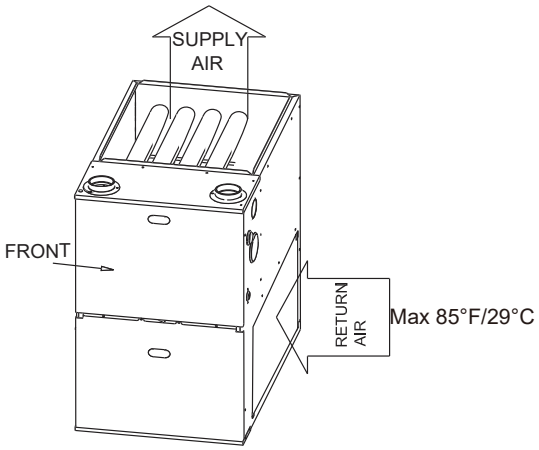

Fig. 3-1 Return Air Temperature

3.2 General Installation

- US: Current edition of the NFGC and the NFPA 90B. For copies, contact the National Fire Protection Association Inc., Batterymarch Park, Quincy, MA 02269; or for only the NFGC, contact the American Gas Association, 400 N. Capitol Street, N.W., Washington, DC 20001.
- CANADA: NSCNGPIC. For a copy, contact Standard Sales, CSA International, 178 Rexdale Boulevard, Etobicoke (Toronto), Ontario, M9W 1R3 Canada.

3.3 Combustion and Ventilation Air

- US: Section 9.3 of the NFGC, NFPA 54/ANSI Z223.1 Air for Combustion and Ventilation.
- CANADA: Part 8 ofCAN/CSA-B149.1-05, Venting Systems and Air Supply for Appliances.

3.4 Duct Systems

- US and CANADA: Air Conditioning Contractors Association (ACCA) Manual D, Sheet Metal and Air Conditioning Contractors National Association (SMACNA), or American Society of Heating, Refrigeration, and Air Conditioning Engineers (ASHRAE) 2001 Fundamentals Handbook Chapter 34.

3.5 Acoustical Lining and Fibrous Glass Duct

- US and CANADA: current edition of SMACNA and NFPA 90B as tested by UL Standard 181 for Class I Rigid Air Ducts.

3.6 Gas Piping and Gas Pipe Pressure Testing

- US: NFPA 54/ANSI Z223.1 Chapters 5, 6, 7, and 8 and National Plumbing Codes.
- CANADA: CAN/CSA-B149.1-05 Parts 4, 5, and 6 and Appendices A, B, E, and H.

3.7 Electrical Connections

- US: National Electrical Code (NEC) ANSI/NFPA 70.
- CANADA: Canadian Electrical Code CSA C22.I.

3.8 Electrical power supply

Voltage: ANSI C84.1 (104-127 volt)

3.9 Venting

- US: NFGC NFPA 54/ANSI Z223.1-2006 ; chapters 12 and 13.
- CANADA: CAN/CSA-B149.1-05 Part 8 and Appendix C.

4 ELECTROSTATIC DISCHARGE (ESD) PRECAUTIONS PROCEDURE

⚠ CAUTION

FURNACE RELIABILITY HAZARD

Improper installation or service of furnace may cause premature furnace component failure.
Electrostatic discharge can affect electronic components.
Follow the Electrostatic Discharge Precautions Procedure listed below during furnace installation and servicing to protect the furnace electronic control. Precautions will prevent electrostatic discharges from personnel and hand tools which are held during the procedure. These precautions will help to avoid exposing the control to electrostatic discharge by putting the furnace, the control, and the person at the same electrostatic potential.

- Disconnect all power to the furnace. Multiple disconnects maybe required. DO NOT TOUCH THE CONTROL OR ANY WIRE CONNECTED TO THE CONTROL PRIOR TO DISCHARGING YOUR BODY'S ELECTROSTATIC CHARGE TO GROUND.
- Firmly touch the clean, unpainted, metal surface of the furnace chassis which is close to the control. Tools held in a person's hand during grounding will be satisfactorily discharged.
- After touching the chassis, you may proceed to service the control or connecting wires as long as you do nothing to recharge your body with static electricity (for example: DO NOT move or shuffle your feet, do not touch ungrounded objects, etc.).
- If you touch ungrounded objects (and recharge your body with static electricity), firmly touch a clean, unpainted metal surface of the furnace again before touching control or wires.
- Use this procedure for installed and uninstalled (ungrounded) furnaces.
- Before removing a new control from its container, discharge your body's electrostatic charge to ground to protect the control from damage. If the control is to be installed in a furnace, follow items 1 through 4 before bringing the control or yourself in contact with the furnace. Put all used and new controls into containers before touching ungrounded objects.

5 LOCATION

5.1 General

This multipoise furnace is shipped in packaged configuration. Some assembly and modifications are required when used in any of the four applications . This furnace must:

- Be installed so the electrical components are protected from water.
- Not be installed directly on any combustible material other than wood flooring (refer to SAFETY CONSIDERATIONS).
- Be located as close to the chimney or vent and attached to an air distribution system. Refer to Air Ducts section.
- Be provided ample space for servicing and cleaning. Always comply with minimum fire protection clearances shown on the furnace clearance to combustible label.

The following types of furnace installations may require OUTDOOR AIR for combustion due to chemical exposures:

- Commercial buildings
- Buildings with indoor pools
- Laundry rooms
- Hobby or craft rooms, and
- Chemical storage areas

⚠ WARNING

CARBON MONOXIDE POISONING HAZARD

Failure to follow this warning could result in personal injury or death, and unit component damage.
Corrosive or contaminated air may cause failure of parts containing flue gas, which could leak into the living space. Air for combustion must not be contaminated by halogen compounds, which include fluoride, chloride, bromide, and iodide. These elements can corrode heat exchangers and shorten furnace life. Air contaminants are found in aerosol sprays, detergents, bleaches, cleaning solvents, salts, air fresheners, and other household products. Do not install furnace in a corrosive or contaminated atmosphere. Make sure all combustion and circulating air requirements are met, in addition to all local codes and ordinances.

If air is exposed to the following substances, it should not be used for combustion air, and outdoor air may be required for combustion:

- Permanent wave solutions
- Chlorinated waxes and cleaners
- Chlorine based swimming pool chemicals
- Water softening chemicals
- De-icing salts or chemicals
- Carbon tetrachloride
- Halogen type refrigerants
- Cleaning solvents (such as perchloroethylene)
- Printing inks, paint removers, varnishes, etc.
- Hydrochloric acid
- Cements and glues
- Antistatic fabric softeners for clothes dryers
- Masonry acid washing materials

All fuel-burning equipment must be supplied with air for fuel combustion. Sufficient air must be provided to avoid negative pressure in the equipment room or space. A positive seal must be made between the furnace cabinet and the return-air duct to prevent pulling air from the burner area and from draft safeguard opening.

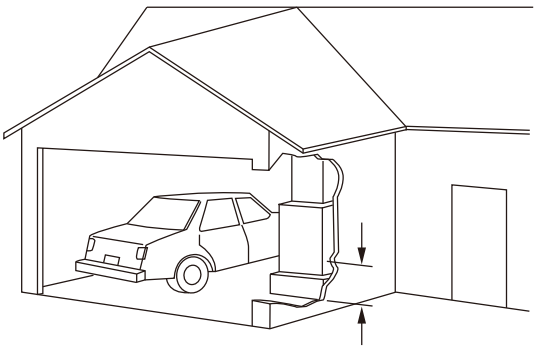

Fig. 5-1 Installation in a Garage

⚠ WARNING

FIRE, INJURY OR DEATH HAZARD

Failure to follow this warning could result in personal injury, death, and/or property damage.
When the furnace is installed in a residential garage, the burners and ignition sources must be located at least 18 inches (457 mm) above the floor. The furnace must be located or protected to avoid damage by vehicles. When the furnace is installed in a public garage, airplane hangar, or other building having a hazardous atmosphere, the furnace must be installed in accordance with the NFGC or CAN/CSA - B149 .1-05.(See Fig. 5-1).

⚠ CAUTION

PERSONAL INJURY AND/OR PROPERTY DAMAGE HAZARD

Improper use or installation of this furnace may cause premature furnace component failure.
This gas furnace may be used for heating buildings under construction provided that:
- The furnace is permanently installed with all electrical wiring, piping, venting and ducting installed according to these installation instructions. A return air duct is provided, sealed to the furnace casing, and terminated outside the space containing the furnace. This prevents a negative pressure condition as created by the circulating air blower, causing a flame rollout and/or drawing combustion products into the structure.
- The furnace is controlled by a thermostat. It may not be "hot wired" to provide heat continuously to the structure without thermostatic control.
-Clean outside air is provided for combustion. This is to minimize the corrosive effects of adhesives, sealers and other construction materials. It also prevents the entrainment of drywall dust into combustion air, which can cause fouling and plugging of furnace components.
- The temperature of the return air to the furnace is maintained between 60°F (16°C) and 85°F (29°C), with no evening setback or shutdown. The use of the furnace while the structure is under construction is deemed to be intermittent operation per our installation instructions.
- The air temperature rise is within the rated rise range on the furnace rating plate, and the gas input rate has been set to the nameplate value.
- The filters used to clean the circulating air during the construction process must be either changed or thoroughly cleaned prior to occupancy.
- The furnace, ductwork and filters are cleaned as necessary to remove drywall dust and construction debris from all HVAC system components after construction is completed.
- Verify proper furnace operating conditions including ignition, gas input rate, air temperature rise, and venting according to these installation instructions.

6 INSTALLATION

⚠ WARNING

FIRE, EXPLOSION, AND CARBON MONOXIDE POISONING HAZARD

Failure to follow this warning could result in personal injury, death, and/or property damage. Do not install the furnace on its back or hang furnace with control compartment facing downward. Safety control operation will be adversely affected. Never connect return-air ducts to the back of the furnace.

This furnace may be installed in an upflow position or horizontal on either the left or right side panel. Do not install this furnace on its back. (see Fig 6-1-6-3).

6.1 Upflow Installation

Bottom Return Air Inlet

These furnaces are shipped with bottom closure panel installed in bottom return-air opening. Remove and discard this panel when bottom return air is used. To remove bottom closure panel, perform the following:

1.Tilt or raise furnace and remove the screw holding bottom filler panel. (See Fig. 6-1.)

2. Remove bottom closure panel.

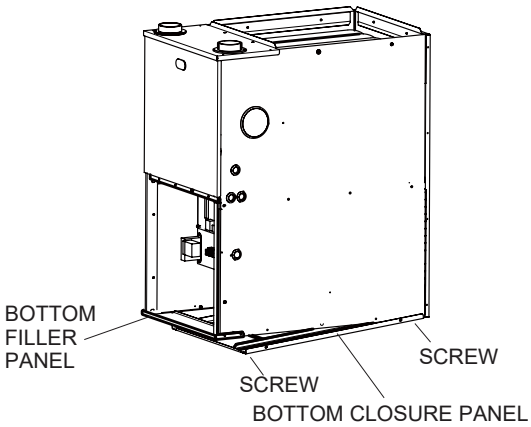

Fig. 6-1 Removing Bottom Closure Panel

Side Return Air Inlet

These furnaces are shipped with bottom closure panel installed in bottom return-air opening. This panel MUST be in place when only side return air is used.

NOTE

Side return-air openings can be used in UPFLOW and most HORIZONTAL configurations.

Upflow Installation

Tilt the unit slightly (minimum 1/2" (12.7mm) to maximum of 3/4" (19mm)) from back to front to aid in the draining of the heat exchanger.

NOTE

The inducer will work to promote condensate out of the heat exchanger if the unit is installed flush with a flat surface. However, it is recommended that the unit be installed in accordance with the ill ustrations below for better drainage.

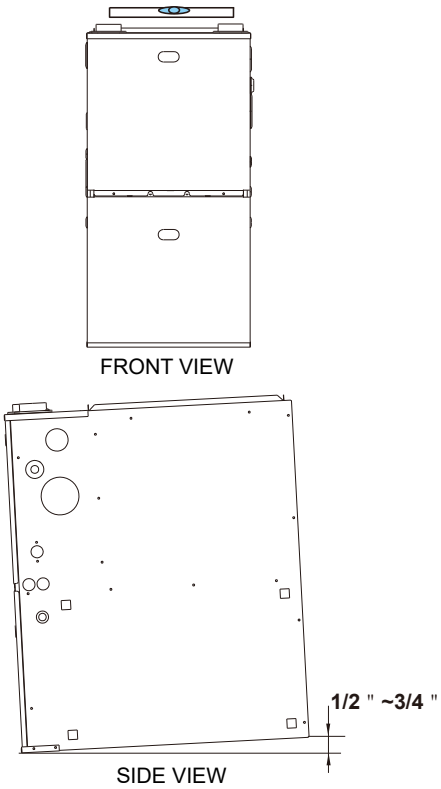

Fig. 6-2 Upflow Application-Setting Equipment

Horizontal Left Side Installation

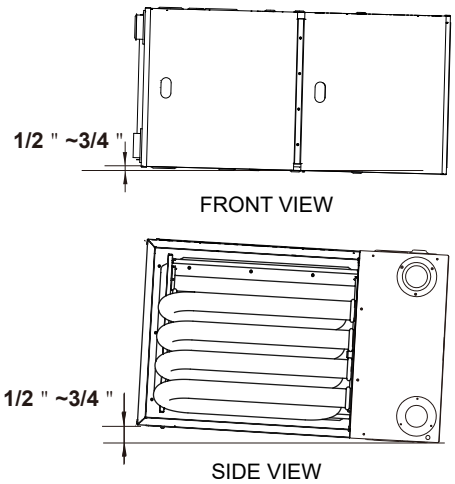

Horizontal Right Side Installation

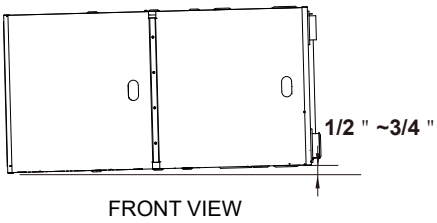

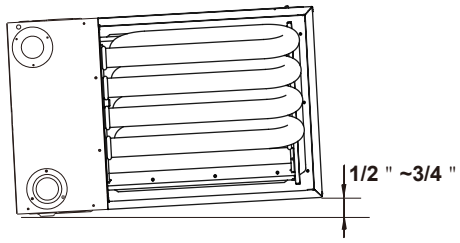

SIDE VIEW

Tilt the unit slightly (minimum 1/2" (12.7mm) to maximum of 3/4" (19mm)) from back to front to aid in the draining of the heat exchanger.

Fig. 6-3 Horizontal Application-Setting Equipment

6.2 Horizontal Installation

The furnace can be installed horizontally in an attic or crawl space on bottom or either the left-hand (LH) or right-hand (RH) side. The furnace can be hung from floor joists, rafters or trusses or installed on a non-combustible platform, blocks, bricks or pad.

FURNACE SUSPENSION

If suspending the furnace from rafters or joists, use 3/8" threaded rod and 2"x2"x1/8" angle iron as shown below. The length of rod will depend on the application and the clearances necessary. (See Fig. 6-4 and 6-5.)

HORIZONTAL APPLICATIONS

Horizontal applications, in particular, may dictate many of the installation's specifics such as airflow direction, ductwork connections, flue and combustion air pipe connections, etc. The basic application of this furnace as a horizontal furnace differs only slightly from an upright installation. When installing a furnace horizontally, additional consideration must be given to the following:

DRAIN TRAP AND LINES

In horizontal applications the condensate drain trap is secured to the furnace side panel, suspending it below the furnace. A minimum clearance of 7 inches below the furnace must be provided for the drain trap. Additionally, the appropriate downward piping slope must be maintained from the drain trap to the drain location. Refer to Section "Condensate Drain Line & Drain Trap". If the drain trap and drain line will be exposed to temperatures near or below freezing, adequate measures must be taken to prevent condensate from freezing.

LEVELING

Leveling ensures proper condensate drainage from the heat exchanger and induced draft blower. For proper flue pipe drainage, the furnace must be level lengthwise from end to end. The furnace should also have a slight tilt with the access doors downhill ((minimum 1/2" (12.7mm) to maximum of 3/4" (19mm)) from the back panel. The slight tilt allows the heat exchanger condensate, generated in the recuperator coil, to flow forward to the recuperator coil front cover.

ALTERNATE ELECTRICAL AND GAS LINE CONNECTIONS

This furnace has provisions allowing for electrical and gas line connections through either side panel. In horizontal applications the connections can be made either through the "top" or "bottom" of the furnace.

DRAIN PAN

A drain pan must be provided if the furnace is installed above a conditioned area. The drain pan must cover the entire area under the furnace (and air conditioning coil if applicable).

FURNACE SUSPENSION

If the furnace is installed in a crawl space it must be suspended from the floor joist or supported by a concrete pad. Never install the furnace on the ground or allow it to be exposed to water. Furnace Suspension for further details(See Fig. 6-4).

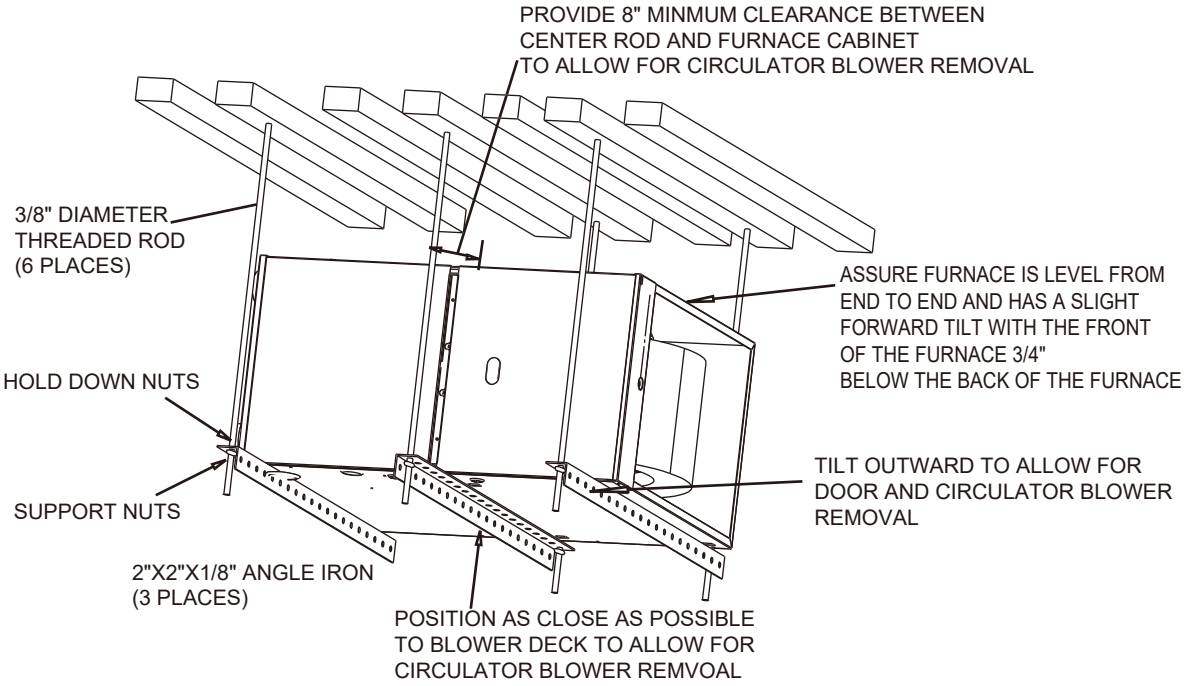

Fig. 6-4 Horizontal Installationn

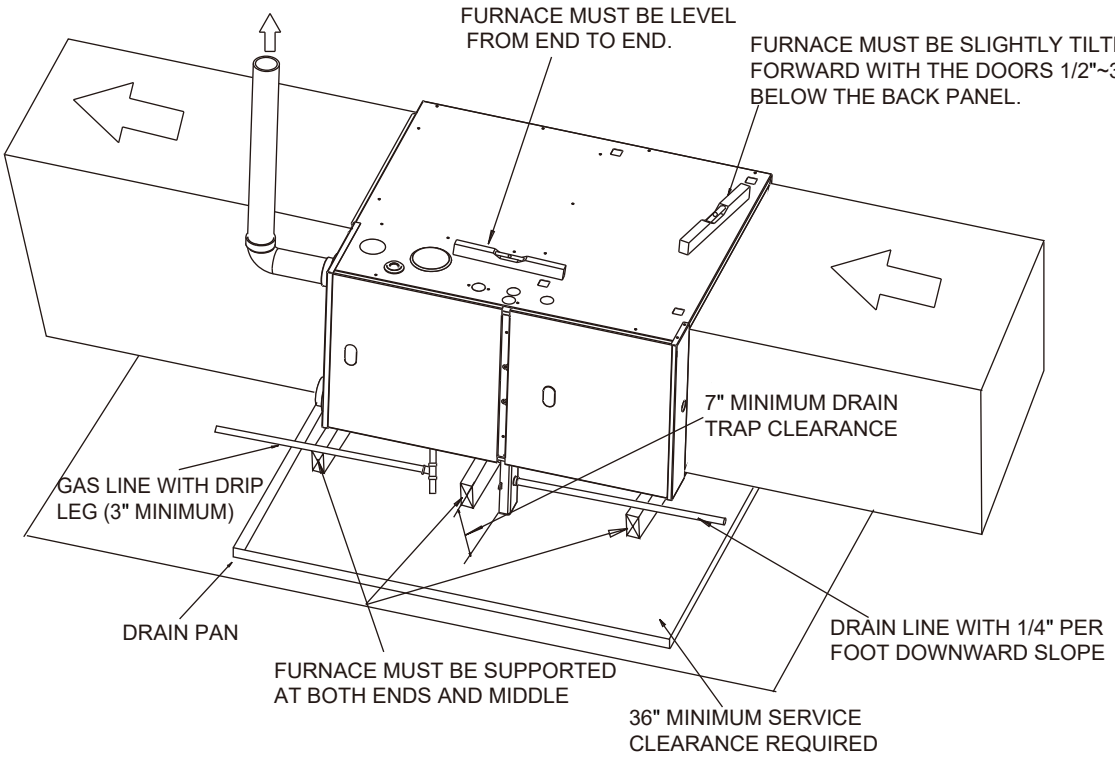

Fig. 6-5 Horizontal Installationn

6.3 Drain Line And Over Flow Pressure Switch

NOTE

FOR HORIZONTAL LEFT INSTALLATION (AIR DISCHARGE TO THE LEFT), HOSES OF CONDENSATE OVERFLOW AND THE PRESSURE SWITCH NEED TO BE RELOCATED. (SEE FIGURE 6-10 & 6-11)

To achieve higher energy efficiency than non-condensing furnace, condensing furnace will generate significant amount of condensate water from combustion to recover latent heat in flue. Condensate generated from flue must be collected and discharged to drain line.

For some of venting directions and furnace installations, reroute condensate and/or overflow pressure switch hoses may be required.

Follow the instructions in Figure 14-15 for each installation:

Follow the bullets listed below when installing the drain system. Refer to the following sections for specific details concerning furnace drain trap installation and drain hose hook ups.

- The drain trap supplied with the furnace must be used.
- The drain line between furnace and drain location must be constructed of 3/4" PVC or CPVC.
- The drain line between furnace and drain location must maintain a 1/4 inch per foot downward slope toward the drain.
- Do not trap the drain line in any other location than at the drain trap supplied with the furnace.
- Do not route the drain line outside where it may freeze.
- If the drain line is routed through an area which may see temperatures near or below freezing, precautions must be taken to prevent condensate from freezing within the drain line.
- If an air conditioning coil is installed with the furnace, a common drain may be used. An open tee must be installed in the drain line, near the cooling coil, to relieve positive air pressure from the coil's plenum. This is necessary to prohibit any interference with the function of the furnace's drain trap.

6.3.1 Standard Right or Left Side Drain Hose Connections

All installations positions require the use of the drain trap, hoses, tubes, and clamps. The following quantity of hoses, tubes, and hose clamps are provided with the unit.

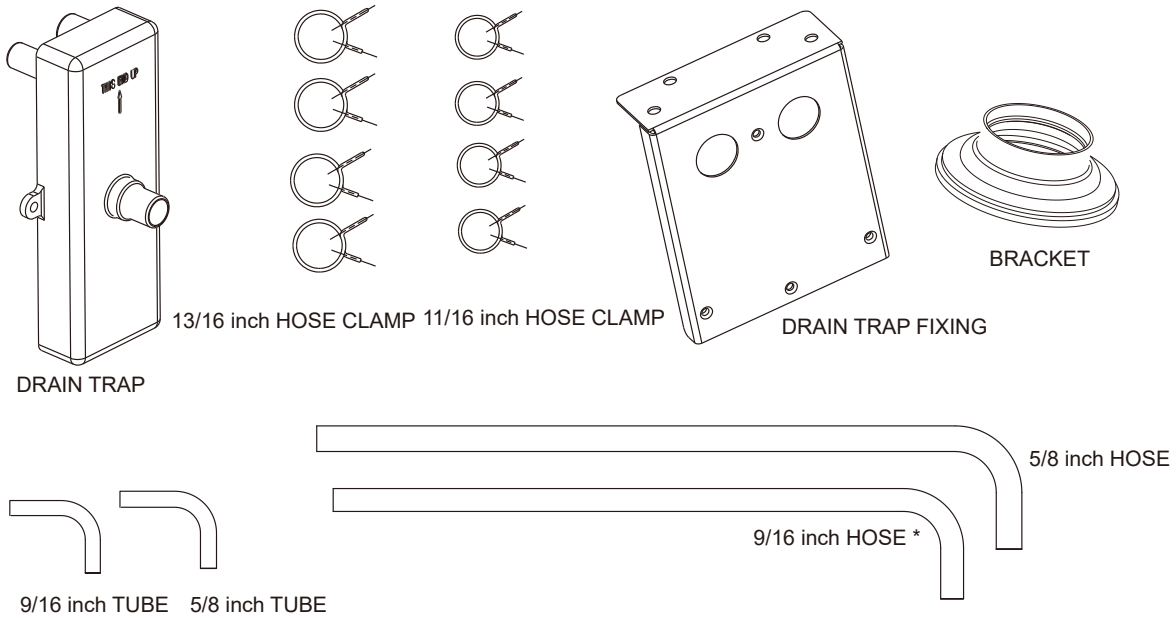

Fig. 6-6 Hose and Tube Identification

* The inter diameter of 9/16 inch hose is 15/32 inch, and the inter diameter of 5/8 inch hose is 19/32 inch in fact.

6.3.2 For Upflow Installation

Top venting

- Connect vent pipe and air intake pipe (if applicable) to \ the couplers on the furnace top panel. Use street 2 to 3" transition for 3" pipe.
- Depend on which side the condensate trap to be mounted, remove 2 knockouts on the side where trap be mounted. Mount trap with two screws provided.
- Cut and remove 1/4 inch from the end of the drain port on the rubber elbow.
- Connect 5/8 inch hose between collector box and trap and connect 9/16 inch hose between elbow and trap. (see Fig. 6-7). Cut the excess hoses if necessary.
- Secure and tight all hoses.

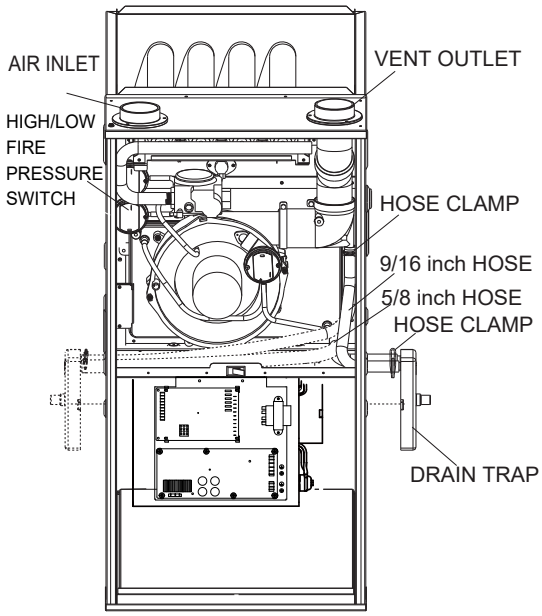

Fig. 6-7 Upflow Installation, Top Venting

Right side venting

- Remove plug (9/16 inch) from right side panel of furnace and cut the insulation to the size.
- Remove 3 screws securing air intake coupler on top panel and remove coupler.
- Mount coupler to the lefft side using the same screws saved from removing top panel coupler.
- Cover the top panel opening using the plug removed from left side panel.
- Remove rubber elbow connected to the inducer. Use field provided 2" plastic pipe and nipple to connect to the inducer.
- Connect rubber elbow to the 2" pipe out side the unit. Elbow should be connected as close to the side panel as possible.
- Connect 2" pipe to the rubber elbow. If 3" pipes are used, use a field provided transition.
- Use provided or field supplied (if applicable) mounting bracket to mount condensate trap on the proper location of right side panel .
- Screws for mounting bracket should not interfere any components inside the furnace.
- Connect 5/8 inch hose between collector box and trap and connect 9/16 inch hose between rubber elbow and trap.
- Cut the excess hoses if necessary.
- Relocate junction box to the other side of cabinet if necessary.
- Secure and tight all hoses.

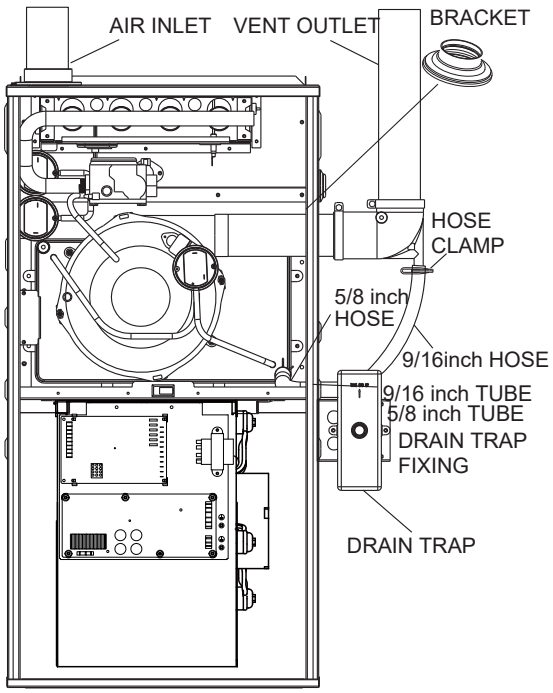

Fig. 6-8 Upflow Installation, Right Side Venting

6.3.3 For Horizontal Installations

1. Air discharge to the right and vent through furnace top panel (see Fig. 6-9)

- Connect vent pipe and air intake pipe (if applicable) to the couplers on the furnace top panel. Use straight 2 to 3" transition for 3" pipe.
- Use two field supplied elbows and nipples to make flue and air intake pipes vertical. Elbows should be as close to the furnace as possible.
- Use provided or field supplied (if applicable) mounting bracket to mount condensate trap to the proper location of right side panel.
- Screws for mounting bracket should not interfere any components inside the furnace.
- Cut and remove 1/4 inch from the end of the drain port on the rubber elbow.
- Connect 5/8 inch hose between collector box and trap and connect 9/16 inch hose between rubber elbow and trap.
- Cut the excess hoses if necessary.
- Secure and tighten all hoses.

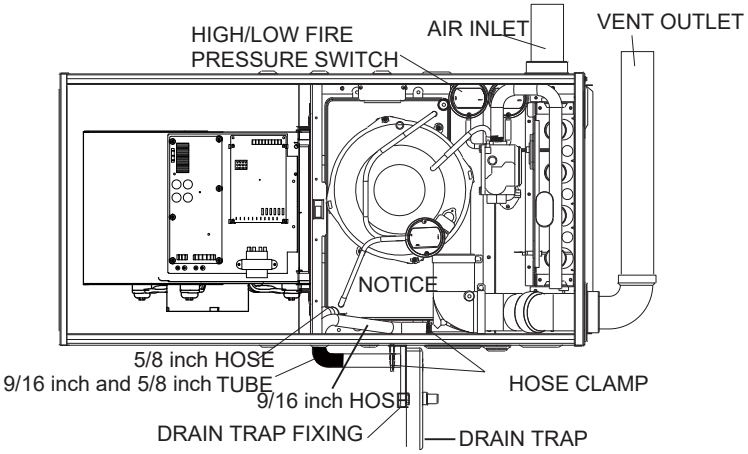

Fig. 6-9 Horizontal Right Side Installation

2. Air discharge to the left and vent through furnace top panel (see Fig.6-10 and Fig. 6-12)

NOTE

In this installation, hoses connecting between ports of overflow protection pressure switch (overflow switch) and pressure tabs on the collector box MUST be switched. The overflow switch has two ports, which is different from two other regular pressure switches that have only one port. Make sure that black port (positive) is connected to the lower position tap on condensate collector box and gray port (negative) to higher tap of condensate box. Connecting incorrectly will result in failure to protect condensate overflow.

NOTE

Two pressure switches (one port type switches) should be relocated to other side of furnace side panel to ensure pressure switches are above water tap of collector box.

- Connect vent pipe and air intake pipe (if applicable) to the couplers on the furnace top panel. Use street 2 to 3" transition for 3" pipe.
- Use two field supplied elbows and nipples to make flue and air intake pipes vertical. Elbows should be as close to the furnace as possible.
- Use provided or field supplied (if applicable) mounting bracket to mount condensate trap on the proper location of right side panel.
- Screws for mounting bracket should not interfere any components inside the furnace.
- Connect 5/8 inch hose between collector box and trap. Cut the excess hose to fit before connection.
- Connect 5/8 inch hose between collector box and trap and connect 9/16 inch hose between inducer draining tap and trap.
- Plug both holes on rubber elbow use provided plugs. Cut the excess hoses if necessary.
- Secure and tight all hoses.
- Relocate junction box to the other side of cabinet if necessary.

3. Air discharge to the left and vent through furnace right side panel (see Fig.6-11)

- Remove plug (9/16 inch) from furnace's right side panel and cut the insulation to the size.
- Remove 3 screws securing air intake coupler on top panel and remove coupler.
- Mount coupler to the right side using the same screws saved from removing top panel coupler.
- Cover the top panel opening using the plug removed from side panel.
- Remove 5/8 inch knockout on right panel and cut insulation. Install rubber grommet provided in the kit bag to 5/8 inch opening.
- Remove rubber elbow connected to the inducer. Use field provided 2" plastic pipe and nipple to connect to the inducer.
- Connect rubber elbow to the 2" pipe. Elbow should be connected as close to the side panel as possible.
- Secure and tight all hoses.
- Connect 2" pipe to the rubber elbow. If 3" pipes are used, use a field provided transition.
- Use provided or field supplied (if applicable) mounting bracket to mount condensate trap on the proper location of right side panel .
- Screws for mounting bracket should not interfere any components inside the furnace.
- Connect 5/8 inch hose between collector box and trap and connect 9/16 inch hose between inducer draining tap and trap.
- Cut the excess hoses if necessary.
- Relocate junction box to the other side of cabinet if necessary.

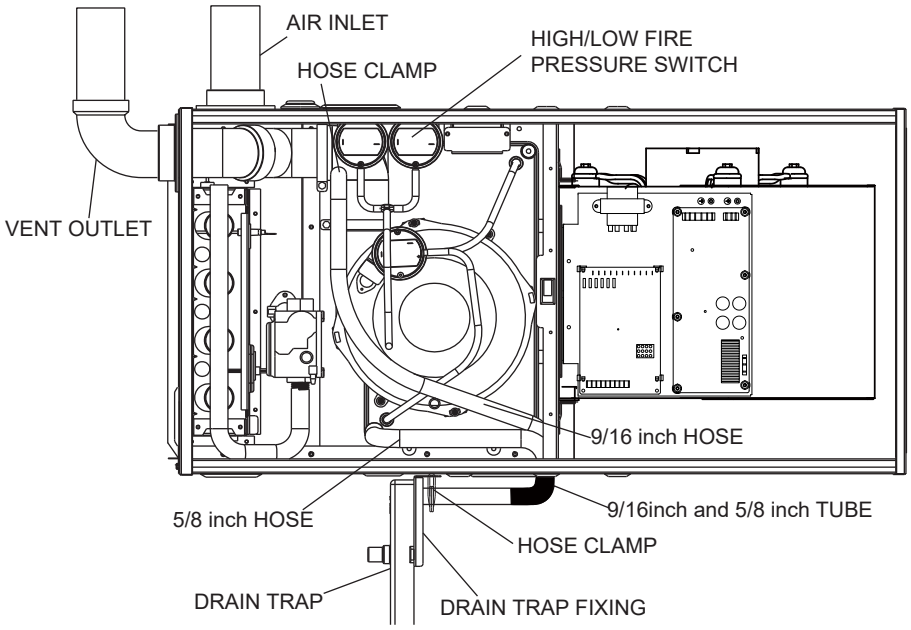

Fig. 6-10 Horizontal Left Side Installation, Vent Through Top Panel

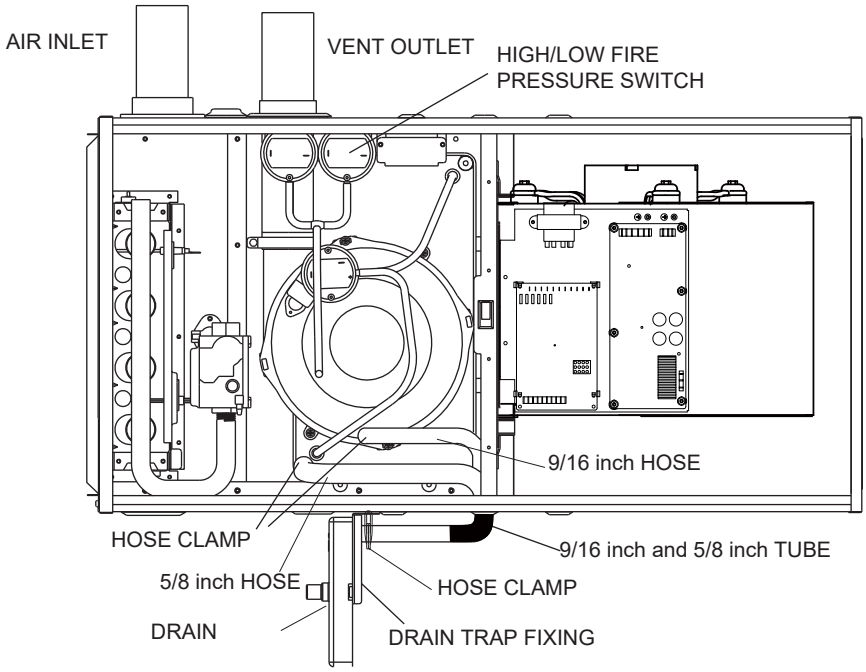

Fig. 6-11 Horizontal Left Side Installation, Vent Through Side Panel

NOTE

In this installation, hoses connecting between ports of overflow protection pressure switch (overflow switch) and pressure tabs on the collector box **MUST be switched**. The overflow switch has two ports, which is different from two other regular pressure switches that have only one port. Make sure that black port (positive) is connected to the lower position tap on condensate collector box and gray port (negative) to higher tap of condensate box. Connecting incorrectly will result in failure to protect condensate overflow.(See Fig. 6-12)

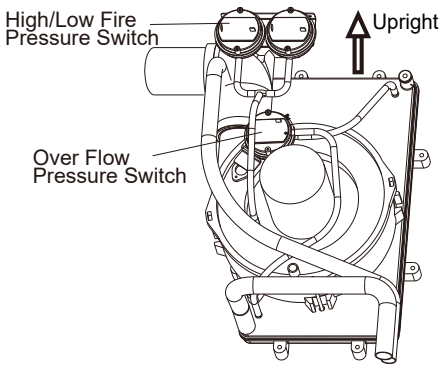

Fig. 6-12 Pressure Switch Position

6.4 Filter Arrangement

⚠ WARNING

CARBON MONOXIDE AND POISONING HAZARD

Failure to follow this warning could result in personal injury, or death.
Never operate a furnace without a filter or with filter access door removed.

Filter Installation

All applications require the use of a field installed filter. All filters and mounting provision must be field supplied. Filters must be installed external to the furnace cabinet. DO NOT attempt to install filters inside the furnace.

NOTE

Single side return above 1800 CFM is approved as long as the filter velocity does not exceed filter manufacturer's recommendation and a transition is used to allow use on a 20x25 filter.

Filter Size

See recommended filter size and type in Table 6-2.
One of the most common causes of a problem in furnace is a blocked or dirty filter. The filter must be inspected monthy for dirt accumulation and replace it if neccessarily.

Filter Type

Air velocity through throwaway filters may not exceed 300 ft per minute (91.4m/min). All velocities over this require the use of hight velocity filters. If a normal speed desposable filter is used and air speed exceeds 300 ft per minute (FPM), two side returns or one side return and the bottom return may be needed. For airflow, refer to Table 6-1.

If disposable filters are used air throw away passage through filters should be increased to twice the size of original air opening by using a transition duct or using two filters in V shap in normal duct size.

Filter Type

Locate the 4 cutout locations. These indicate the size of the cut-out to be made in the furnace side panel. Refer to Fig 6-13, "Side Return Cutout Markings".

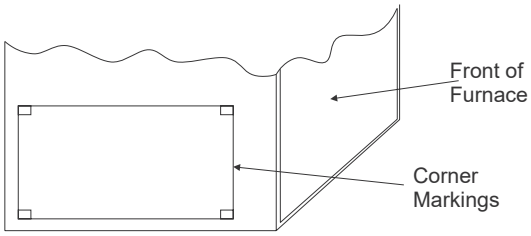

Fig. 6-13 Side Return Cutout Markings

Install the side filter rack following the instructions provided with that accessory. If a filter(s) is provided at another location in the return air system, the ductwork may be directly attached to the furnace side panel.
IMPORTANT: Some accessories such as electronic air cleaners and pleated media may require a larger side opening. Follow the instructions supplied with that accessory for side opening requirements.

6.5 Air Ducts

General Requirements

The duct system should be designed and sized according to accepted national standards such as those published by: Air Conditioning Contractors Association (ACCA), Sheet Metal and Air Conditioning Contractors National Association (SMACNA) or American Society of Heating, Refrigerating and Air Conditioning Engineers (ASHRAE) or consult The Air Systems Design Guidelines reference tables available from your local distributor. The duct system should be sized to handle the required system design CFM at the design external static pressure. The furnace airflow rates are provided in Table 6-1 AIR DELIVERY -CFM (Without Filter).

When a furnace is installed so that the supply ducts carry air circulated by the furnace to areas outside the space containing the furnace, the return air shall also be handled by duct(s) sealed to the furnace casing and terminating outside the space containing the furnace.

Secure ductwork with proper fasteners for type of ductwork used.

Seal supply and return-duct connections to furnace with code approved tape or duct sealer.

NOTE

Flexible connections should be used between ductwork and furnace to prevent transmission of vibration. Ductwork passing through unconditioned space should be insulated and sealed to enhance system performance. When air conditioning is used, a vapor barrier is recommended.

Maintain a 1 in (25 mm) clearance from combustible materials to supply air ductwork for a distance of 36 in (914 mm) horizontally from the furnace. See NFPA 90B or local code for further requirements.

Ductwork Acoustical Treatment

NOTE

Metal duct systems that do not have a 90 degree elbow and 10 ft (3 m) of main duct to the first branch take-off may require internal acoustical lining. As an alternative, fibrous ductwork may be used if constructed and installed in accordance with the latest edition of SMACNA construction standard on fibrous glass ducts. Both acoustical lining and fibrous ductwork shall comply with NFPA 90B as tested by UL Standard 181 for Class 1 Rigid air ducts.

Supply Air Connections

For a furnace not equipped with a cooling coil, the outlet duct shall be provided with a removable access panel. This opening shall be accessible when the furnace is installed and shall be of such a size that the heat exchanger can be viewed for possible openings using light assistance or a probe can be inserted for sampling the airstream. The cover attachment shall prevent leaks.

Upflow and Horizontal Furnaces

Connect supply-air duct to flanges on furnace supply-air outlet. Bend flange upward to 90° with wide duct pliers. The supply-air duct must be connected to ONLY the furnace supply-outlet-air duct flanges or air conditioning coil casing (when used). DO NOT cut main furnace casing side to attach supply air duct, humidifier, or other accessories. All accessories MUST be connected to duct external to furnace main casing.

NOTE

For horizontal applications, the top-most flange may be bent past 90 degrees to allow the evaporator coil to hang on the flange temporarily while the remaining attachment and sealing of the coil are performed.

Return Air Connections

The furnace and its return air system shall be designed and installed so that negative pressure created by the air circulating fan cannot affect another appliance's combustion air supply or act to mix products of combustion with circulating air. The air circulating fan of the furnace, if installed in an enclosure communicating with another fuel-burning appliance not of the direct-vent type, shall be operable only when any door or panel covering an opening in the furnace fan compartment or in a return air plenum on ducts is in the closed position.

Table 6-1 Air Delivery - CFM (Without Filter)

FURNACE SIZE	SPEED	Static Pressure	0.1	0.2	0.3	0.4	0.5	0.6	0.7	0.8	0.9	1
60B	H	CFM	1339	1327	1338	1309	1321	1320	1342	1334	1316	1335
		Temp Rise-1st stage°F	--	--	--	--	--	--	--	--	--	--
		Temp Rise-2nd stage°F	37.3	37.7	37.5	38.3	38.1	38.1	37.6	37.9	38.5	38.0
	Mid-H	CFM	1124	1118	1102	1106	1096	1099	1102	1109	1089	1105
		Temp Rise-1st stage°F	--	--	--	--	--	--	--	--	--	--
		Temp Rise-2nd stage°F	44.2	44.5	45.2	45.1	45.6	45.5	45.5	45.3	46.2	45.6
	Mid	CFM	880	870	853	858	865	858	854	866	871	839
		Temp Rise-1st stage°F	36.7	37.2	37.9	37.8	37.6	38.0	38.2	37.8	37.6	39.1
		Temp Rise-2nd stage°F	56.3	57.0	58.1	57.9	57.5	58.0	58.4	57.7	57.4	59.7
	Mid-L	CFM	779	768	762	756	740	753	757	747	785	766
		Temp Rise-1st stage°F	41.4	42.0	42.4	42.8	43.8	43.1	43.0	43.6	41.6	42.7
		Temp Rise-2nd stage°F	--	--	--	--	--	--	--	--	--	--
	Low	CFM	553	586	543	569	552	562	584	572	575	567
		Temp Rise-1st stage°F	58.1	54.9	59.3	56.7	58.5	57.6	55.5	56.8	56.5	57.4
		Temp Rise-2nd stage°F	--	--	--	--	--	--	--	--	--	--
80B	H	CFM	1230	1233	1222	1226	1214	1236	1255	1244	1249	1251
		Temp Rise-1st stage°F	--	--	--	--	--	--	--	--	--	--
		Temp Rise-2nd stage°F	53.9	53.8	54.4	54.3	54.8	53.9	53.2	53.7	53.6	53.6
	Mid-H	CFM	1052	1052	1041	1044	1037	1034	1048	1046	1024	1076
		Temp Rise-1st stage°F	--	--	--	--	--	--	--	--	--	--
		Temp Rise-2nd stage°F	62.8	62.8	63.6	63.5	64.0	64.3	63.4	63.7	65.1	62.1
	Mid	CFM	849	861	854	853	855	844	855	848	834	859
		Temp Rise-1st stage°F	50.6	50.0	50.4	50.5	50.5	51.2	50.6	51.2	52.1	50.7
		Temp Rise-2nd stage°F	--	--	--	--	--	--	--	--	--	--
	Mid-L	CFM	754	771	765	764	728	761	782	739	758	758
		Temp Rise-1st stage°F	56.9	55.7	56.2	56.3	59.2	56.8	55.3	58.5	57.2	57.3
		Temp Rise-2nd stage°F	--	--	--	--	--	--	--	--	--	--
	Low	CFM	569	554	571	572	568	572	598	594	572	548
		Temp Rise-1st stage°F	--	--	--	--	--	--	--	--	--	--
		Temp Rise-2nd stage°F	--	--	--	--	--	--	--	--	--	--

* A filter is required for each return -air Inlet. Airflow performance Included 3/4-in (19 mm) washable filter media such as contained in factory-authorized accessory filter rack. To determine airflow performance with this filter, assume an additional 0.1 in. wc available external static pressure.

FURNACE SIZE	SPEED	Static Pressure	0.1	0.2	0.3	0.4	0.5	0.6	0.7	0.8	0.9	1
80C	H	CFM	1303	1301	1281	1291	1289	1291	1290	1295	1298	1253
		Temp Rise-1st stage°F	--	--	--	--	--	--	--	--	--	--
		Temp Rise-2nd stage°F	50.8	50.9	51.8	51.5	51.6	51.6	51.7	51.6	51.6	53.5
	Mid-H	CFM	1120	1127	1134	1130	1135	1138	1132	1143	1107	1112
		Temp Rise-1st stage°F	38.5	38.3	38.1	38.3	38.2	38.2	38.5	38.2	39.5	39.4
		Temp Rise-2nd stage°F	59.0	58.7	58.4	58.7	58.5	58.4	58.8	58.3	60.3	60.1
	Mid	CFM	908	894	896	902	896	894	864	891	935	880
		Temp Rise-1st stage°F	47.3	48.1	48.0	47.8	48.2	48.4	50.1	48.7	46.5	49.5
		Temp Rise-2nd stage°F	--	--	--	--	--	--	--	--	--	--
	Mid-L	CFM	818	819	825	800	813	803	831	838	791	802
		Temp Rise-1st stage°F	52.4	52.4	52.1	53.8	53.1	53.8	52.1	51.8	54.9	54.2
		Temp Rise-2nd stage°F	--	--	--	--	--	--	--	--	--	--
	Low	CFM	577	628	605	624	615	601	628	573	590	588
		Temp Rise-1st stage°F	--	--	--	--	--	--	--	--	--	--
		Temp Rise-2nd stage°F	--	--	--	--	--	--	--	--	--	--
100C	H	CFM	1752	1764	1768	1781	1774	1786	1762	1802	1792	1786
		Temp Rise-1st stage°F										
		Temp Rise-2nd stage°F	47.5	47.3	47.3	47.0	47.3	47.0	47.7	46.8	47.2	47.4
	Mid-H	CFM	1512	1506	1536	1523	1514	1509	1529	1551	1565	1532
		Temp Rise-1st stage°F	38.6	38.8	38.1	38.5	38.8	39.0	38.6	38.1	37.9	38.8
		Temp Rise-2nd stage°F	54.8	55.1	54.1	54.6	55.1	55.3	54.7	54.0	53.6	54.8
	Mid	CFM	1354	1354	1362	1370	1357	1381	1389	1394	1416	1383
		Temp Rise-1st stage°F	42.9	43.0	42.8	42.6	43.1	42.4	42.3	42.2	41.7	42.7
		Temp Rise-2nd stage°F	61.1	61.1	60.8	60.6	61.2	60.3	60.0	59.9	59.0	60.5
	Mid-L	CFM	1165	1165	1176	1164	1185	1190	1186	1205	1174	1199
		Temp Rise-1st stage°F	49.7	49.7	49.3	49.9	49.2	49.0	49.2	48.6	49.9	49.0
		Temp Rise-2nd stage°F	--	--	--	--	--	--	--	--	--	--
	Low	CFM	994	1025	1018	1024	1032	1026	1035	988	1005	1041
		Temp Rise-1st stage°F	58.1	56.4	56.9	56.6	56.3	56.7	56.3	59.0	58.1	56.2
		Temp Rise-2nd stage°F	--	--	--	--	--	--	--	--	--	--
100D	H	CFM	1926	1926	1931	1943	1936	1941	1960	1974	2015	2043
		Temp Rise-1st stage°F	--	--	--	--	--	--	--	--	--	--
		Temp Rise-2nd stage°F	43.2	43.3	43.2	43.1	43.3	43.3	42.9	42.7	42.0	41.6
	Mid-H	CFM	1746	1752	1749	1748	1749	1763	1771	1776	1794	1791
		Temp Rise-1st stage°F	--	--	--	--	--	--	--	--	--	--
		Temp Rise-2nd stage°F	47.5	47.4	47.6	47.7	47.7	47.4	47.3	47.2	46.9	47.0
	Mid	CFM	1488	1525	1525	1515	1528	1546	1501	1525	1546	1544
		Temp Rise-1st stage°F	39.0	38.2	38.2	38.6	38.3	37.9	39.1	38.6	38.2	38.3
		Temp Rise-2nd stage°F	55.6	54.3	54.4	54.8	54.4	53.9	55.5	54.7	54.1	54.2
	Mid-L	CFM	1348	1374	1341	1383	1381	1385	1408	1404	1400	1401
		Temp Rise-1st stage°F	43.0	42.3	43.3	42.1	42.2	42.2	41.6	41.8	42.0	42.0
		Temp Rise-2nd stage°F	61.2	60.2	61.7	59.9	60.1	60.0	59.1	59.3	59.6	59.6
	Low	CFM	1163	1186	1164	1167	1174	1178	1182	1129	1163	1172
		Temp Rise-1st stage°F	49.7	48.8	49.8	49.7	49.5	49.4	49.3	51.7	50.3	50.0
		Temp Rise-2nd stage°F	--	--	--	--	--	--	--	--	--	--

* A filter is required for each return -air Inlet. Airflow performance Included 3/4-in (19 mm) washable filter media such as contained in factory-authorized accessory filter rack. To determine airflow performance with this filter, assume an additional 0.1 in. wc available external static pressure.

FURNACE SIZE	SPEED	Static Pressure	0.1	0.2	0.3	0.4	0.5	0.6	0.7	0.8	0.9	1
120D	H	CFM	1926	1933	1915	1923	1916	1929	1971	1941	2036	1998
		Temp Rise-1st stage°F	--	--	--	--	--	--	--	--	--	--
		Temp Rise-2nd stage°F	51.8	51.7	52.2	52.1	52.4	52.1	51.1	52.0	49.8	50.7
	Mid-H	CFM	1721	1747	1716	1749	1760	1768	1778	1783	1747	1788
		Temp Rise-1st stage°F	--	--	--	--	--	--	--	--	--	--
		Temp Rise-2nd stage°F	57.8	57.0	58.1	57.1	56.8	56.6	56.4	56.3	57.5	56.4
	Mid	CFM	1489	1497	1503	1504	1507	1488	1496	1518	1519	1568
		Temp Rise-1st stage°F	46.7	46.6	46.4	46.5	46.5	47.1	47.0	46.4	46.4	45.1
		Temp Rise-2nd stage°F	66.5	66.3	66.1	66.1	66.1	67.0	66.7	65.8	65.9	64.0
	Mid-L	CFM	1384	1360	1365	1384	1382	1383	1379	1401	1421	1414
		Temp Rise-1st stage°F	50.2	51.1	51.0	50.4	50.6	50.6	50.8	50.1	49.5	49.9
		Temp Rise-2nd stage°F	--	--	--	--	--	--	--	--	--	--
	Low	CFM	1165	1175	1162	1158	1158	1184	1186	1204	1201	1185
		Temp Rise-1st stage°F	59.5	59.0	59.8	60.0	60.1	58.9	58.9	58.1	58.4	59.2
		Temp Rise-2nd stage°F	--	--	--	--	--	--	--	--	--	--

* A filter is required for each return -air Inlet. Airflow performance Included 3/4-in (19 mm) washable filter media such as contained in factory-authorized accessory filter rack. To determine airflow performance with this filter, assume an additional 0.1 in. wc available external static pressure.

Table 6-2 Recommended Filter Sizes (High Velocity 600 FPM)

FURNACE CASING WIDTH	FILTER SIZE		FILTER TYPE
	SIDE RETURN	BOTTOM RETURN	
17-1/2(445)	16X25(406X635)	16X25(406X635)	High Velocity (600 FPM)
21(533)	16X25(406X635)	20X25(508X635)	High Velocity (600 FPM)
24.5(622)	16X25(406X635)	24X25(610X635)	High Velocity (600 FPM)

NOTES:

1. Air velocity through throwaway type filters may not exceed 300 ft per minute (91.4 m/min). All velocities over this require the use of high velocity filters.

2. Do not exceed 1,800 CFM using a single side return and a 16 x 25 filter. For CFM greater than 1,800, you may use two side returns or one side and the bottom or one side return with a transition to allow use of a 20x25 filter.

6.6 Airflow Adjustments

Table 6-3 Fan Speed Extended Settings

J962V Furnaces	J962V Fan Speed Extended Settings							
	Dip Switch				Nominal speed			
	S3-1	S3-2	S3-3	S3-4	H-Heat	L-Heat	H-Cool	L-Cool
60B	0	1	1	0	4	3	5	3
60B	0	1	0	0	4	3	3	2
80B	1	0	0	0	5	3	5	4
80B	1	1	1	0	5	3	3	2
80B	1	0	1	0	5	3	5	3
80B	1	1	0	0	5	3	4	3
80C	1	0	0	0	5	3	5	4
80C	1	1	0	0	5	3	4	3
100C	0	0	1	0	4	2	3	2
100C	0	0	0	0	4	2	2	2
100D	0	0	1	0	4	2	3	2
120D	0	1	0	0	4	3	3	2

6.7 Circulator Blower Speed Adjustment

This furnace is equipped with a ECM circulator blower motor. This blower provides ease in adjusting blower speeds. Refer to Table 6-4 for blower speed factory setting sees. These blower speeds should be adjusted by the installer to match the installation requirements so as to provide the correct heating temperature rise and the correct cooling CFM.

Table 6-4 Factory Set Blower Speed

Model	HI COOL	LOW COOL	HI HEAT	LOW HEAT
60B	High(5)	Mid(3)	Mid-H(4)	Mid(3)
80B	High(5)	Mid-H(4)	High(5)	Mid(3)
80C	High(5)	Mid-H(4)	High(5)	Mid(3)
100C	Mid(3)	Mid-L(2)	Mid-H(4)	Mid-L(2)
100D	Mid(3)	Mid-L(2)	Mid-H(4)	Mid-L(2)
120D	Mid(3)	Mid-L(2)	Mid-H(4)	Mid(3)

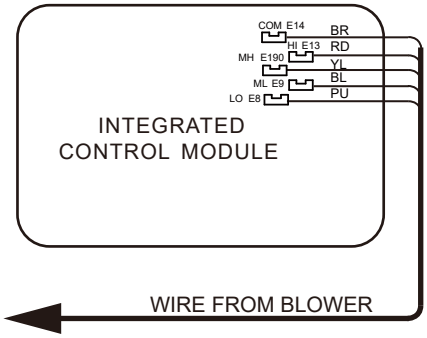

CIRCULATOR BLOWER FAN TIMING ADJUSTMENT

NOTE

Items in this section refer to the air circulator blower fan, NOT to the induced draft blower. The induced draft blower timing sequence is not adjustable. The circulator blower fan timing is adjustable.

As shipped, the circulator blower fan will remain on for 180 seconds after the gas valve closes. When a call for cooling occurs, the circulator fan comes on and remains on for 90 seconds after the call for cooling ends. During normal heating operation, the circulator fan will come on approximately 30 seconds after the gas valve opens.

HEAT OFF DELAY		
DIP SW		NOMINAL (SECONDS)
S2-1	S2-2	
*OFF	OFF	90
ON	OFF	120
OFF	ON	150
ON	ON	180

COOL OFF DELAY		
DIP SW		NOMINAL (SECONDS)
S2-3	S2-4	
*OFF	OFF	60
ON	OFF	90
OFF	ON	120
ON	ON	150

Fig. 6-14 Adjustment Switches - (Not present on all models)

7 COMBUSTION AIR AND VENT SYSTEM

7.1 Combustion Air And Vent Safety

This Category IV, dual certified direct vent furnace is designed for residential application. It may be installed without modification to the condensate system in a basement, garage, equipment room, alcove, attic or any other indoor location where all required clearance to combustibles and other restrictions are met. The combustion air and the venting system must be installed in accordance with Section 5.3, Air for Combustion and Ventilation, of the National Fuel Gas Code Z223.1/NFPA 54 (latest edition), or Sections 7.2, 7.3 or 7.4 of CSA B149.1, National Gas and Propane Codes (latest edition) or applicable provisions of the local building code and these instructions.

IMPORTANT

The “VENT SYSTEM” must be installed as specified in these instructions for Residential and Non HUD Modular Homes. The direct vent system is the only configuration that can be installed in a Non HUD Modular Home.

NOTE

This furnace may not be common vented with any other appliance, since it requires separate, properly sized air intake and vent lines.
The furnace shall not be connected to any type of B, BW or L vent or vent connector, and not connected to any portion of a factorybuilt or masonry chimney.
The furnace shall not be connected to a chimney flue serving a separate appliance designed to burn solid fuel.

NOTE

When combustion air pipe is installed above a suspended ceiling or when it passes through a warm and humid space, the pipe must be insulated with 1/2" Armaflex or other heat resistant type insulation if two feet or more of pipe is exposed.
Vent piping must be insulated if it will be subjected to freezing temperatures such as routing through unheated areas or through an unused chimney.

7.2 Combustion Air/Vent Pipe Sizing

The size of pipe required will be determined by the furnace model, the total length of pipe required and the number of elbows required.

Table 7-1, "Maximum Equivalent Pipe Length" lists the maximum equivalent length of pipe allowed for each model of furnace. The equivalent length of elbows is shown in Table 6-5, "Equivalent Length of Fittings".

The equivalent length of the vent system is the total length of straight pipe PLUS the equivalent length of all of the elbows.

The following rules must also be followed:

1. Long radius (sweep) elbows are recommended. Standard elbows may be used, but since they have a longer equivalent length, they will reduce the total length of pipe that will be allowed. Short radius (plumbing vent) elbows are not allowed. The standard dimensions of the acceptable elbows are shown below.
2. The maximum equivalent length listed in Table 7-1, "Maximum Equivalent Pipe Length" is for the vent piping and the air intake piping separately. For example, if the table allows 60 equivalent feet for a particular model, then the vent can have 60 equivalent feet of pipe, and the combustion air intake can have another 60 equivalent feet of pipe.
3. Three vent terminal elbows (two for the vent and one for the combustion air intake) are already accounted for and need not be included in the equivalent length calculation.
4. All combustion air and vent pipe must conform to American National Standards Institute (ANSI) and American Society for Testing and Materials (ASTM) standards D1785 (Schedule 40 PVC), D2665 (PVC-DWV), F891 (PVC-DWV Cellular Core), D2261 (ABS-DWV) or F628 (Schedule 40 ABS). Pipe cement and primer must conform to ASTM Standard D2546 (PVC) or D2235 (ABS). If ABS pipe is to be used, any joint where ABS pipe is joined to PVC pipe must be glued with cement that is approved for use with BOTH materials. Metallic materials must not be used for venting or air intake.
5. If a flexible connector is used in the vent system, it must be made of a material that is resistant to acidic exposure and to at least 225°F temperature. Flexible connectors are also allowed in the combustion air pipe.
6. All models are supplied with 2" vent connections. When the pipe must be increased to 3" diameter, the transition from 2" to 3" must be done as close to the furnace as possible. For upflow models, the transition from 2" to 3" should be done immediately above the furnace. For horizontal models, the transition from 2" to 3" pipe should be done immediately after exiting the furnace.
7. In Canada, vents shall be certified to ULC S636, Standard for Type BH Gas Venting Systems. IPEX System 636 PVC is certified to this standard.
8. In Canada, the first three feet (900 mm) of the vent must be readily accessible for inspection.
9. Minimum vent length for all models is 5 ft.

NOTE

For single pipe systems it is recommended to install the combustion air coupling provided and install approximately 18" of PVC pipe on the furnace.In addition to the vent/flue pipe, a single 90° elbow should be secured to the combustion air intake to prevent inadvertent blockage.

Table 7-1 Maximum Equivalent Pipe Length

Model Input Btu/h (kW)	Pipe Size Inches (cm)	Maximum Equivalent length ft (m)
60 (17.6)	2 (5.1)	40.0 (12.1)
60 (17.6)	3 (7.6)	90.0 (27.4)
80 (23.4)	2 (5.1)	32.8 (10.0)
80 (23.4)	3 (7.6)	90.0 (27.4)
100 (29.3)	2 (5.1)	30.0 (9.1)
100 (29.3)	3 (7.6)	70.0 (21.3)
120 (35.1)	2 (5.1)	16.4 (5.0)
120 (35.1)	3 (7.6)	50.0 (15.2)

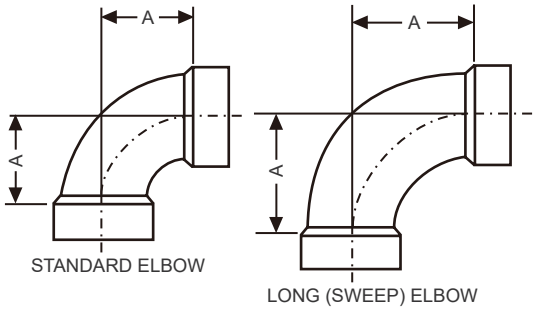

Fig. 7-1 Dimensions

Table 7-2 Elbow Dimensions

Elbow	"A" Dimension
2" Standard	2-5/16"
3" Standard	3-1/16"
2" Sweep	3-1/4"
3" Sweep	4-1/16"

Dimensions are those required in Standard ASTM D-3311.

Table 7-3 Equivalent Length of Fittings

Fitting	Equivalent Length
2" 90º sweep elbow	5 t of 2" pipe
2" 45º sweep elbow	2-1/2 ft of 2" pipe
2" 90º standard elbow	10 ft of 2" pipe
2" 45º standard elbow	5 ft of 2" pipe
3" 90º sweep elbow	5 ft of 3" pipe
3" 45º sweep elbow	2-1/2 ft of 3" pipe
3" 90º standard elbow	10 ft of 3" pipe
3" 45º standard elbow	5 ft of 3" pipe
2" corrugated connector	10 ft of 2" pipe
3" corrugated connector	10 ft of 3" pipe

Example:
An 80,000 Btu/h furnace requires 32 ft of pipe and four 90º elbows.
Using 2" pipe and standard elbows, the total equivalent length will be:

32 ft of 2" pipe =	32 equivalent feet
4 - 90º standard 2" elbows = (4x10)=	40 equivalent feet
Total =	72 equivalent feet of 2" pipe

This exceeds the 65 foot maximum equivalent length of 2" pipe allowed for that model and is thus not acceptable.
By using sweep elbows, the total equivalent length will be:

32 ft of 2" pipe =	32 equivalent feet
4 - 90º sweep 3" elbows = (4x5) =	20 equivalent feet
Total =	52 equivalent feet of 2" pipe

This is less than the 65 foot maximum equivalent length of 2" pipe allowed for that model and is thus acceptable.
Alternatively, using 3" pipe and standard elbows, the total equivalent length will be:

32 ft of 3" pipe =	32 equivalent feet
4 - 90º sweep 2" elbows = (4x10) =	40 equivalent feet
Total =	72 equivalent feet of 3" pipe

This is less than the 90 foot maximum equivalent length of 3" pipe allowed for that model and is thus acceptable.

Table 7-4 Combustion Air Intake and Vent Connection Size at Furnace (All Models)

FURNACE VENT CONNECTION SIZES	
Intake Pipe Size	2" (5.1 cm)
Vent Pipe Size	2" (5.1 cm)

IMPORTANT

Furnace vent pipe connections are sized for 2" (5.1 cm) pipe. Any pipe size change must be made outside the furnace casing in a vertical pipe section to allow proper drainage of condensate. An offset using two 45º (degree) elbows will be required for plenum clearance when the vent is increased to 3" (7.6 cm).

7.3 Combustion Air And Vent Piping Assembly

The final assembly procedure for the combustion air and vent piping is as follows:

1. Cut piping to the proper length beginning at the furnace.
2. Debur the piping inside and outside.
3. Chamfer (bevel) the outer edges of the piping.
4. Dry-fit the vent piping assembly from the furnace to the outside termination checking for proper fit support and slope.
5. Dry-fit the combustion air piping assembly checking for proper fit, support and slope on the following systems:
   a. Sealed combustion air systems from the furnace to the outside termination.
   b. Ventilated combustion air systems from the furnace to the attic or crawl space termination.

⚠ CAUTION

Solvent cements are flammable and must be used in well-ventilated areas only. Keep them away from heat, sparks and open flames.
Do not breathe vapors and avoid contact with skin and eyes.

6. Disassemble the combustion air and vent piping, apply cement primer and the cement per the manufacturers instructions.
   Primer and cement must conform to ASTM D2564 for PVC, or ASTM D2235 for ABS piping.
7. All joints must provide a permanent airtight and watertight seal.
8. Support the combustion air and vent piping such that it is angled a minimum of 1/4" per foot (21 mm/m) so that condensate will flow back towards the furnace. Piping should be supported with pipe hangers to prevent sagging.
9. Seal around the openings where the combustion air and / or vent piping pass through the roof or sidewalls.

7.4 Combustion Air/Venting

IMPORTANT

The vent must be installed with the minimum required clearances, and must comply with local codes and requirements.

VENT CLEARANCES

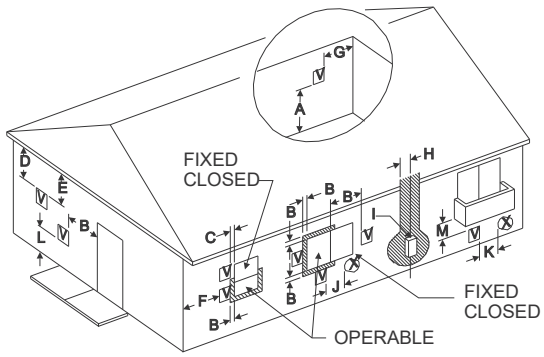

V VENT TERMINAL

X AIR SUPPLY

AREA WHERE TERMINAL IS NOT PERMITTED

Fig. 7-2 Home Layout

Direct Vent Terminal Clearances	Canadian Installations[1,3]	US Installation[2,3]
A. Clearance above grade, veranda, porch, deck, or balconyA. Clearance above grade, veranda, porch, deck, or balcony	12" (30.5 cm)	12" (30.5 cm)
B. Clearance to window or door that may be opened	12" (30.5 cm) for models <100,000 Btu/h (30 kW), 36" (91 cm) for models >100,000 Btu/h (30 kW).	Two-pipe (direct vent) applications: 9" (23 cm) for models < 50,000 Btu/h (15 kW), 12" (30.5 cm) for models >50,000 Btu/h (15 kW). †† Single-pipe applications: 4 ft (1.2 m).
C. Clearance to permanently closed window	12" (30.5 cm)	12" (30.5 cm)
D. Vertical clearance to ventilated soffit located above the terminal within a horizontal distance of 2 ft (61 cm) from the center line of the terminal	12" (30.5 cm) or in accordance with local installation codes and the requirements of the gas supplier.	12" (30.5 cm) or in accordance with local installation codes and the requirements of the gas supplier.
E. Clearance to unventilated soffit	12" (30.5 cm) or in accordance with local installation codes and the requirements of the gas supplier	12" (30.5 cm) or in accordance with local installation codes and the requirements of the gas supplier.
F. Clearance to outside corner	12" (30.5 cm) or in accordance with local installation codes and the requirements of the gas supplier.	12" (30.5 cm) or in accordance with local installation codes and the requirements of the gas supplier.
G. Clearance to inside corner	36" (91.4 cm)	36" (91.4 cm)
H. Clearance to each side of center line extended above meter/regulator assembly	Above a meter/regulator assembly within 36" (91.4 cm) horizontally of the vertical center-line of the regulator vent outlet to a maximum vertical distance of 15 ft (4.5 m) above the meter/regulator assembly.	Above a meter/regulator assembly within 36" (91.4 cm) horizontally of the vertical center-line of the regulator vent outlet to a maximum vertical distance of 15 ft (4.5 m) above the meter/regulator assembly.
I. Clearance to service regulator vent outlet	36" (91.4 cm)	36" (91.4 cm) or in accordance with local installation codes and the requirements of the gas supplier.
J. Clearance to nonmechanical air supply inlet to building or the combustion air inlet to any other appliance	12" (30.5 cm) for models < 100,000 Btu/h (30 kW), 36" (91.4 cm) for models >100,000 Btu/h (30 kW).	Two-pipe (direct vent) applications: 9" (23 cm) for models < 50,000 Btu/h (15 kW), 12" (30.5 cm) for models >50,000 Btu/h (15 kW). Single-pipe applications: 4 ft (1.2 m).
K. Clearance to a mechanical supply inlet	6 ft (1.83 m)	3 ft (91.4 cm) above if within 10 ft (3 m) horizontally.
L. Clearance above paved sidewalk or paved driveway located on public property	7 ft (2.13 m)	7 ft (2.13 m) or in accordance with local installation codes and the requirements of the gas supplier.
M. Clearance under veranda, porch, deck, or balcony	12" (30.5 cm)	12" (30.5 cm) or in accordance with local installation codes and the requirements of the gas supplier.

1. In accordance with the current CSA B149.1-00, Natural Gas and Propane Installation Code.
2. In accordance with the current ANSI Z223.1 / NFPA 54, National Gas Code.
3. In accordance with the current ANSI Z21.47 * CSA 2.3 American National Standard.
4. A vent shall not terminate directly above a sidewalk or paved driveway that is located between two single family dwellings and serves both dwellings.
5. 12" (30.5 cm) up from the bottom edge of the structure for Two-pipe (direct vent) applications per ANSI Z223.1 / NFPA 54, National Gas Code.
6. Permitted only if veranda, porch, deck, or balcony is fully open on a minimum of two sides beneath the floor and the distance between the top of the vent termination and the underside of the veranda, porch, or deck is greater than 12" (30.5 cm) as specified in CSA B149.1-00.

A vent shall not terminate less than 12" (30.5 cm) above a grade level.
Any fresh air or make up inlet for dryer or furnace area is considered to be forced air inlet.
Avoid areas where condensate drippage may cause problems such as above planters, patios, or adjacent to windows where steam may cause fogging.
A terminus of a vent shall be fitted with a cap in accordance with the vent manufacturer's installation instructions, or in accordance with the installation instructions for a special venting system.
Responsibility for the provision of proper adequate venting and air supply for application shall rest with the installer.
Vent shall extend high enough above building, or a neighboring obstruction, so that wind from any direction will not create a positive pressure in the vicinity of the vent.

IMPORTANT

Consideration must be given for degradation of building materials by flue gases. Sidewall termination may require sealing or shielding of building surfaces with a corrosion resistant material to protect against combustion product corrosion. Consideration must be given to wind direction in order to prevent flue products and/or condensate from being blown against the building surfaces. If a metal shield is used it must be a stainless steel material at a minimum dimension of 20 inches (51 cm). It is recommended that a retaining type collar be used that is attached to the building surface to prevent movement of the vent pipe.

7.5 Vent System

This furnace is certified to be installed with one of two possible vent configurations.

1. Horizontal vent system. This vent system can be installed completely horizontal or combinations of horizontal, vertical, or offset using elbows.
2. Vertical vent system. This vent system can be installed completely vertical or a combination of horizontal, vertical, or offset using elbows.

Vent Applications And Termination

When selecting the location for a horizontal combustion air / vent termination, the following should be considered:

1. Observe all clearances listed in vent clearances in these instructions.
2. Termination should be positioned where vent vapors will not damage plants or shrubs or air conditioning equipment.
3. Termination should be located where it will not be affected by wind gusts, light snow, airborne leaves or allow recirculation of flue gases.
4. Termination should be located where it will not be damaged or exposed to flying stones, balls, etc.
5. Termination should be positioned where vent vapors are not objectionable.
6. Horizontal portions of the vent system must slope upwards and be supported to prevent sagging.
7. Direct vent systems must be installed so the vent and the combustion air pipes terminate in the same atmospheric zone. Refer to Figures 7-4 or 7-5.

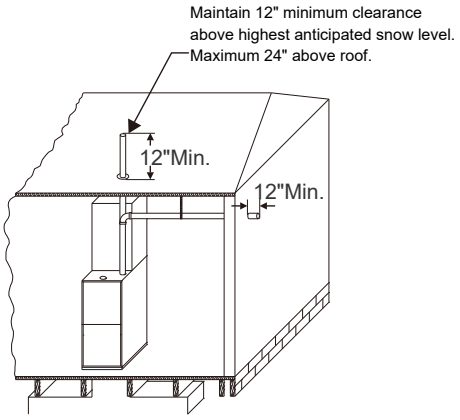

Fig 7-3 Termination Configuration - 1 Pipe

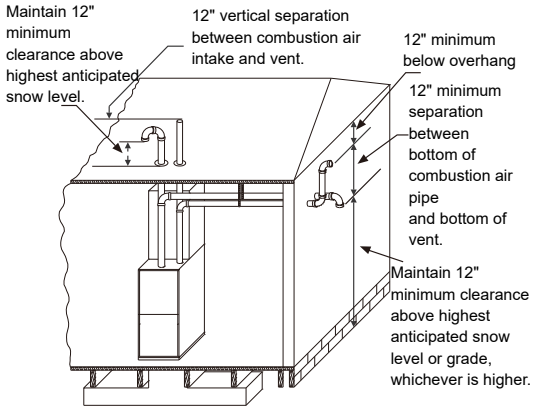

Fig 7-4 Termination Configuration - 2 Pipe

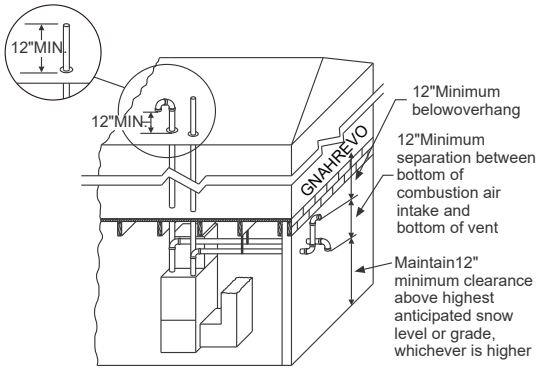

Fig 7-5 Termination Configuration - 2 Pipe Basement

Venting Multiple Units

Multiple units can be installed in a space or structure as either a single pipe configuration or a two-pipe configuration.

The combustion air side of the single pipe configuration shown in Figure 7-3 is referred to in these instructions as ambient combustion air supply. Follow the instructions for ambient combustion air installations, paying particular attention to the section on air source from inside the building. The vent for a single pipe system must be installed as specified in the venting section of these instructions with the vent terminating as shown in Figure 7-3. Each furnace must have a separate vent pipe. Under NO in Figure 7-3. Each furnace must have a separate vent pipe. Under NO circumstances can the two vent pipes be tied together.

The combustion air side of the two-pipe configuration shown in Figure 7-4 can be installed so the combustion air pipe terminates as described in outdoor combustion air or ventilated combustion air sections in these instructions. Follow the instructions for outdoor combustion air or ventilated combustion air and the instructions for installing the vent system with the vent terminating as shown in Figures 7-6 or 7-7. The two-pipe system must have a separate combustion air pipe and a separate vent pipe for each furnace.

Under NO circumstances can the two combustion air or vent pipes be tied together. The combustion air and vent pipes must terminate in the same atmospheric zone.

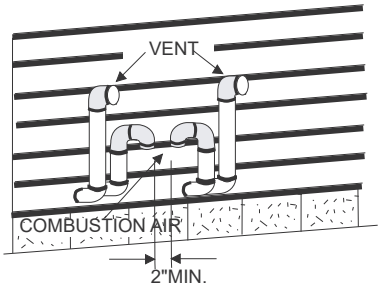

Fig 7-6 Double Horizontal Combustion Air Intake and Vent Termination

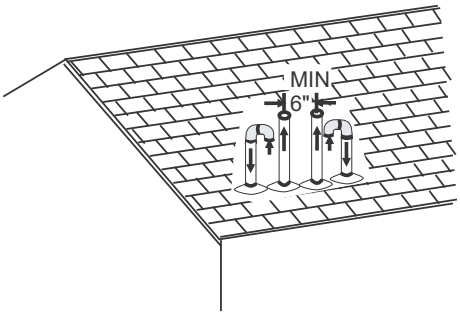

Fig 7-7 Double Vertical Combustion Air Intake and Vent Termination

7.6 Combustion & Ventilation Air Requirements

Combustion Air Supply

All installations must comply with Section 5.3, Air for Combustion and Ventilation of the National Fuel Gas Code, ANSI Z223.1 or Sections 7.2, 7.3 or 7.4 of CAN/CGA B149.1 or .2 Installation Code - latest editions.

This furnace is certified to be installed with one of three possible combustion air intake configurations.

1. **OUTDOOR COMBUSTION AIR**: This is a direct vent configuration where the combustion air is supplied through a PVC or ABS pipe that is connected to the PVC coupling attached to the furnace and is terminated in the same atmospheric zone as the vent. This type of installation is approved on all models. Refer to Figure 7-6.

2. **AMBIENT COMBUSTION AIR**: Combustion air is supplied from the area surrounding the furnace through openings in the furnace casing. The combustion air and the vent pipes are not terminated in the same atmospheric zone. Refer to Figure 7-4 for vent terminations. Refer to "Ambient Combustion Air Supply" for proper installation. Refer to Fig 7-6.

3. **VENTILATED COMBUSTION AIR**: Combustion air is supplied through a PVC or ABS pipe that is connected to the PVC coupling attached to the burner box and is terminated in a ventilated attic or crawl space. The combustion air and the vent pipes are not terminated in the same atmospheric zone. Refer to Figure 7-11 for attic and crawl space termination. Only the combustion air intake may terminate in the attic. The vent must terminate outside.

Outdoor Combustion Air

Combustion Air Intake/Vent Connections

This installation requires combustion air to be brought in from outdoors.
This requires a properly sized pipe (Shown in Figure 7-8) that will bring air in from the outdoors to the furnace combustion air intake collar on the burner box. The second pipe (Shown in Figure 7-8) is the furnace vent pipe.

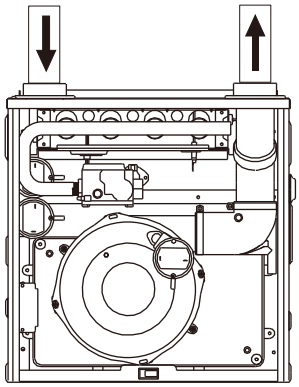

Fig 7-8 Direct Vent Air Intake Connection and Vent Connection

The combustion air intake pipe should be located either through the wall (horizontal or side vent) or through the roof (vertical vent). Care should be taken to locate side vented systems where trees or shrubs will not block or restrict supply air from entering the terminal.
Also, the terminal assembly should be located as far as possible from a swimming pool or a location where swimming pool chemicals might be stored. Be sure the terminal assembly follows the outdoor clearances listed in Section #1 “Outdoor Air Contaminants.”

Ambient Combustion Air Supply

This type installation will draw the air required for combustion from within the space surrounding the appliance and from areas or rooms adjacent to the space surrounding the appliance. This may be from within the space in a non-confined location or it may be brought into the furnace area from outdoors through permanent openings or ducts.
It is not piped directly into the furnace. A single, properly sized pipe from the furnace vent connector to the outdoors must be provided. It is recommended that the supplied intake coupling & 18" of pipe be attached to the furnace to prevent accidental blockage of the combustion air intake.

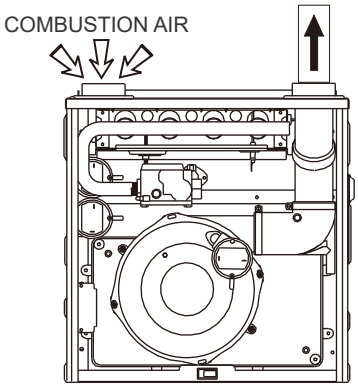

Fig 7-9 Combustion Airflow Path Through The Furnace Casing

⚠ WARNING

This type of installation requires that the supply air to the appliance(s) be of a sufficient amount to support all of the appliance(s) in the area. Operation of a mechanical exhaust, such as an exhaust fan, kitchen ventilation system, clothes dryer or fireplace may create conditions requiring special attention to avoid unsatisfactory operation of gas appliances. A venting problem or a lack of supply air will result in a hazardous condition, which can cause the appliance to soot and generate dangerous levels of CARBON MONOXIDE, which can lead to serious injury, property damage and/or death.

An unconfined space is not less than 50 cu.ft (1.42m^3) per 1,000Btu/hr (0.2928 kW) input rating for all of the appliances installed in that area.
Rooms communicating directly with the space containing the appliances through openings not furnished with doors, are considered a part of the unconfined space.

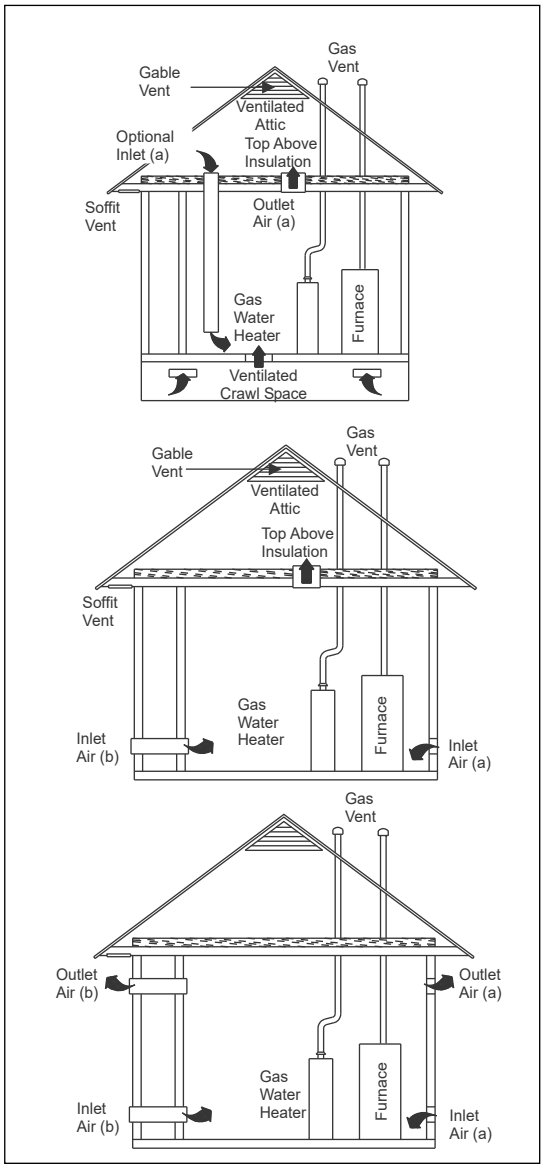

Fig. 7-10 Outside and Ambient Combustion Air

In unconfined spaces in buildings, infiltration may be adequate to provide air for combustion ventilation and dilution of flue gases. However, in buildings of tight construction (for example, weather
stripping, heavily insulated, caulked, vapor barrier, etc.), additional air may need to be provided using the methods described in “An confined space” section.

An confined space is an area with less than 50 cu . ft (1.42m^3) per 1,000 Btu/hr (0.2928 kW) input rating for all of the appliances installed in that area. The following must be considered to obtain proper air for combustion and ventilation in confined spaces.

Equipment Located in Confined Spaces:

a) All air from inside the building:

The confined space shall be provided with two permanent openings communicating directly with an additional room(s) of sufficient volume so that the combined volume of all spaces meets the criteria. The total input of all gas utilization equipment installed in the combined space shall be considered in making this determination. Each opening shall have a minimum free area of 1 square inch per 1,000Btu per hour of the total input rating of all gas utilization equipment in the confined space.
One opening shall be within 12 inches of the top and one within 12 inches of the bottom of the enclosure (See Table 7-4).

Table 7-4 Minimum Area in Square Inch Required for Each Opening

Btu/h Input Rating	Minimum Free Area in Square Inch Required for Each Opening
60,000	60 in^2(387 cm^2)
80,000	80 in^2(516 cm^2)
100,000	100 in^2(645 cm^2)
120,000	120 in^2(742 cm^2)

b) All air from outdoors:

Table 7-5 Minimum Free Area Required for Each Opening

Btu/h Input Rating	Minimum Free Area Required for Each Opening		
	Horizontal Duct (2,000 Btu/h)	Vertical Duct or Opening to Outside (4,000 Btu/h)	Round Duct (4,000 Btu/h)
60,000	30 in^2(193 cm^2)	15 in^2(97 cm^2)	5" (13 cm)
80,000	40 in^2(258 cm^2)	20 in^2(129 cm^2)	5" (13 cm)
100,000	50 in^2(322 cm^2)	25 in^2(161 cm^2)	6" (15 cm)
120,000	60 in^2(387 cm^2)	30 in^2(194 cm^2)	7" (18 cm)
EXAMPLE: Determining Free Area. Appliance 1 Appliance 2 Total Input 100,000 + 30,000 = (130,000 ÷ 4,000) = 32.5 Sq. In. Vertical Appliance 1 Appliance 2 Total Input 100,000 + 30,000 = (130,000 ÷ 2,000) = 65 Sq. In. Horizontal			

Air Supply Openings and Ducts

1. An opening may be used in lieu of a duct to provide to provide the outside air supply to an appliance unless otherwise permitted by the authority having jurisdiction. The opening shall be located within 12" (30.5 cm) horizontally from, the burner level of the appliance.

2. The duct shall be either metal, or a material meeting the class 1 requirements of CAN4-S110 Standard for Air Ducts.
3. The duct shall be least the same cross-sectional area as the free area of the air supply inlet opening to which it connects.
4. The duct shall terminate within 12 in (30.5 cm) above, and within 24 in (61 cm) horizontally from, the burner level of the appliance having the largest input.
5. A square or rectangular shaped duct shall only be used when the required free area of the supply opening is 9 in^2 (58.06 cm^2) or larger. When a square or rectangular duct is used, its small dimension shall not be less than 3 in (7.6 cm).
6. An air inlet supply from outdoors shall be equipped with a means to prevent the direct entry of rain and wind. Such means shall not reduce the required free area of the air supply opening.
7. An air supply inlet opening from the outdoors shall be located not less than 12" (30.5 cm) above the outside grade level.

Combustion Air Source from Outdoors

1. Two permanent openings, one within 12 in (305 mm) of the top and one within 12 in (305 mm) of bottom of the confined space, Two permanent openings, shall communicate directly or by means of ducts with the outdoors, crawl spaces or attic spaces.
2. One permanent openings, commencing within 12 in (305 mm) of the top of the enclosure shall be permitted where the equipment has clearances of at least 1 in (25.4 mm) from the sides and back and 6 in (152.4 mm) from the front of the appliance. The opening shall communicate directly with the outdoors and shall have a minimum free area of:
   a. 1 square in per 3000 Btu per hour (734 mm^2/kW) of the total input rating of all equipment located in the enclosure.
   b. Not less than the sum of all vent connectors in the confined space.
3. The duct shall be least the same cross-sectional area as the free area of the air supply inlet opening to which it connects.
4. The blocking effects of louvers, grilles and screens must be given consideration in calculating free area. If the free area of a specific louver aor grille is not known. Refer to Table 7-6 “Estimated Free Area” to estimated free area.

Table 7-6 Estimated Free Area

Wood or Metal Louvers or Grilles	Wood 20-25% Metal 60-70%
Screens +	1/4" (0.635cm) mesh or larger 100%

Ventilated Combustion Air

The ventilated attic space or a crawl space from which the combustion air is taken must comply with the requirements specified in “**Combustion Air Source from Outdoors**” in this instruction or in Section 7.4, Air for Combustion and Ventilation of the National Fuel Gas Code, ANSI Z223.1 (latest edition). This type installation requires two properly sized pipes. One brings combustion air from a properly ventilated attic space or crawl space and a second pipe that extends from the furnace vent connection (top right of unit) to the exterior of the building.

Vent and Supply (Outside) Air Safety Check Procedure

For Category I furnaces, vent installations shall be in accordance with Parts 7 and 11 of the National Fuel Gas Code, ANSI Z223.1/NFPA 54 and or Section 7 and Appendix B of the CAS B 149.1, Natural Gas and Propane Installation Codes, the local building codes, furnace and vent manufacturer's instructions.
Multi-story or common venting systems are permitted and must be installed in accordance with the National Fuel Gas Code, ANSI Z223.1/NFPA 54 and / or the CSA B 149.1, Natural Gas and Propane Installation Codes, and the manufacturer's instructions.
Vent connectors serving Category I furnaces shall not be connected into any portion of mechanical draft systems operating under positive pressure.

Horizontal portions of the venting system shall be supported to prevent sagging using hangers or perforated straps and must slope upwards not less than 1/4" per foot (0.635 cm/m) from the furnace to the vent terminal.
It is recommended that you follow the venting safety procedure below. This procedure is designed to detect an inadequate ventilation system that can cause the appliances in the area to operate improperly causing unsafe levels of Carbon Monoxide or an unsafe condition to occur.

⚠ WARNING

CARBON MONOXIDE POISONING HAZARD

Failure to follow the steps outlined below for each appliance connected to the venting system being placed into operation could result in carbonmonxide poisoning or death. The following steps shall be followed for each appliance connected to the venting system being placed into operation, while all other appliances connected to the venting system are not in operation:

1. Inspect the venting system for proper size and horizontal pitch. Determine that there is no blockage, restriction, leakage, corrosion or other deficiencies, which could cause an unsafe condition.
2. Close all building doors and windows and all doors.
3. Turn on clothes dryers and TURN ON any exhaust fans, such as range hoods and bathroom exhausts, so they shall operate at maximum speed. Open the fireplace damper. Do not operate a summer exhaust fan.
4. Follow the lighting instructions. Place the appliance being inspected in operation. Adjust thermostat so the appliance shall operate continuously.
5. Test each appliance (such as a water heater) equipped with a draft hood for spillage (down-draft or no draft) at the draft hood relief opening after 5 minutes of main burner operation. Appliances that do not have draft hoods need to be checked at the vent pipe as close to the appliance as possible. Use a combustion analyzer to check the CO2 and CO levels of each appliance. Use a draft gauge to check for a downdraft or inadequate draft condition.
6. After it has been determined that each appliance properly vents when tested as outlined above, return doors, windows, exhaust fans, fireplace dampers and any other gas burning appliance to their normal condition.

7. If improper venting is observed during any of the above tests, a problem exists with either the venting system or the appliance does not have enough combustion air (Supply Air from outside) to complete combustion. This condition must be corrected before the appliance can function safely.

   NOTE: An unsafe condition exists when the CO reading exceeds 40 ppm and the draft reading is not in excess of -0.1 in. W.W.(-25 kPa) with all of the appliance(s) operating at the same time.

8. Any corrections to the venting system and / or to the supply (outside) air system must be in accordance with the National Fuel Gas Code Z223.1 or CAN/CGA B149.1 Natural Gas and Propane Installation Code (latest editions). If the vent system must be resized, follow the appropriate tables in Appendix G of the above codes or for this appliance.

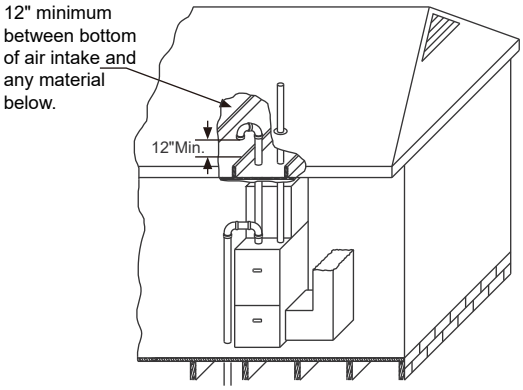

Fig 7-11 Attic and Crawl Space Combustion Air Termination

Specially Engineered Installations

The above requirements shall be permitted to be waived where special engineering, approved by the authority having jurisdiction, provides an adequate supply of air for combustion and ventilation.

⚠ WARNING

Be sure to instruct the owner not to block this intake pipe.

8 GAS SUPPLY AND PIPING

⚠ WARNING

FIRE OR EXPLOSION HAZARD

Failure to follow this warning could result in personal injury, death, and/or property damage.
Never purge a gas line into a combustion chamber.
Never test for gas leaks with an open flame. Use a commercially available soap solution made specifically for the detection of leaks to check all connections.

⚠ WARNING

FIRE OR EXPLOSION HAZARD

Failure to follow this warning could result in personal injury, death, and/or property damage.
Use proper length of pipe to avoid stress on gas control manifold and a gas leak.

⚠ CAUTION

FURNACE OVERHEAT HAZARD

Failure to follow this caution may result in property damage.
Connect gas pipe to gas valve using a backup wrench to avoid damaging gas controls and burner misalignment.

⚠ WARNING

FIRE OR EXPLOSION HAZARD

Failure to follow this warning could result in personal injury, death, and/or property damage.
If local codes allow the use of a flexible gas appliance connector, always use a new listed connector. Do not use a connector which has previously served another gas appliance.
Black iron pipe shall be installed at the furnace gas control valve and extend a minimum of 2 in (51 mm) outside the furnace.

8.1 General

The furnace rating plate includes the approved furnace gas input rating and gas types. The furnace must be equipped to operate on the type of gas applied. This includes any conversion kits required for alternate fuels and/or high altitude.
Inlet gas supply pressures must be maintained within the ranges specified in Table 8-1. The supply pressure must be constant and available with all other household gas fired appliances operating.
The minimum gas supply pressure must be maintained to prevent unreliable ignition. The maximum must not be exceeded to prevent unit overfiring.

Table 8-1 Inlet Gas Supply Pressure

Inlet Gas Supply Pressure		
Natural Gas	Minimum:4.5" W.C.	Maximum:10.5" W.C.
Propane Gas	Minimum:11.0" W.C.	Maximum:13.0" W.C.

NOTE

Adjusting the minimum supply pressure below the limits in the above table could lead to unreliable ignition. Gas input to the burners must not exceed the rated input shown on the rating plate. Overfiring of the furnace can result in premature heat exchanger failure. Gas pressures in excess of 13 inches water column can also cause permanent damage to the gas valve.

At all altitudes and with either fuel, the air temperature rise must be within the range listed on the furnace nameplate. Should this appliance be converted to LP, refer to the instructions included in the factory authorized LP conversion kit.

8.2 High Altitude Derate

Alternately standard derate for altitude from National Fuel Gas Code ANSI Z223.1 of 4% per 1000' may be taken. Refer to the most recent version of ASNI Z223.1 for correct gas orifice. The orifices must be selected using the table below. The furnace derate is 4% for each 1,000 ft above sea level. This table is based upon a heating value of approximately 1,000 Btu/ft^3.

In Canada,the input rating must be derated by 10 percent for altitudes of 2,000 ft (610m) to 4,500 ft (1,370 m) above sea level by an authorized Gas Conversion Station or Dealer.

When an appliance is installed at elevations above 4500ft (1350m), the certified high-altitude input rating shall be reduces at the rate of 4% for each additional 1000ft (300m).

In some areas the gas supplier may artificially derate the gas in an effort to compensate for the effects of altitude. If the gas is artificially derated, the appropriate orifice size must be determined based upon the Btu/ft^3 content of the derated gas and the altitude. Refer to the latest version of NFPA54/ANSI Z223.1 for US and the latest version of CSA B149.1 for Canada., and information provided by the gas supplier to determine the proper orifice size.

Table 8-2 High Altitude Derate Orifice Size Chart (Natural and LP Gas*)

US Installation

Input Rate Btu/h	Number of Burner	Elevation(Ft)									
		0-2000		2000-4000		4000-6000		6000-8000		8000-10000	
		Nat	LP	Nat	LP	Nat	LP	Nat	LP	Nat	LP
60,000	3	45	55	47	56	48	57	49	58	50	59
80,000	4	45	55	47	56	48	57	49	58	50	59
100,000	5	45	55	47	56	48	57	49	58	50	59
120,000	6	45	55	47	56	48	57	49	58	50	59

*LP orifice based on 10 inWC manifold pressure.

The input to the furnace must be checked AFTER reorificing.

Canada Installation

Input Rate Btu/h	Number of Burner	Elevation(Ft)									
		0-2000		2000-4000		4000-6000		6000-8000		8000-10000	
		Nat	LP	Nat	LP	Nat	LP	Nat	LP	Nat	LP
60,000	3	45	55	47	56	48	57	49	58	50	59
80,000	4	45	55	47	56	48	57	49	58	50	59
100,000	5	45	55	47	56	48	57	49	58	50	59
120,000	6	45	55	47	56	48	57	49	58	50	59

*LP orifice based on 10 inWC manifold pressure.

The input to the furnace must be checked AFTER reorificing.

For Canada application, based on regulation that requires 10 % derating between 2,000-4,500 ft orifice change is NOT required up to 4,500 ft.

8.3 Propane Gas Conversion

Possible property damage， personal injury or death may occur if the correct conversion kits are not installed. The appropriate kits must be applied to insure safe and proper furnace operation. all conversions must be performed by a qualified installer or service agency.

This unit is configured for natural gas. The appropriate manufacturer's propane gas conversion kit (factory provided), must be applied for propane gas installations. High Altitude Installations refer to the "High Altitude Derate" section for details.

Contact your distributor for a tabular listing of appropriate manufacturer's kits for propane gas and/or high altitude installations.
The indicated kits must be used to insure safe and proper furnace operation. All conversions must be performed by a qualified installer, or service agency.

The gas supply shall be shut off prior to disconnecting the electrical power before proceeding with conversion.
1.Make sure all utilities (gas and electricity) are turned off
2.Remove the furnace front panel
3.Disconnect the gas line from the gas valve
4.Disconnect the wires at gas control.

To Replace Orifices with LP Orifices From Gas Manifold:
See Fig.8-1.
1.Disconnect all control wires
2.Remove 4 screws holding gas manifold to supporting burner assembly bracket
3.Slide the manifold (with valve and orifices) out of burners. Be careful not to damage the assembly.
4.Replace the natural gas orifices with the LP orifices or appropriate high altitude orifices (refer to Section High Altitude Installation)
5.Re-assemble the gas manifold and re-connect all wires.

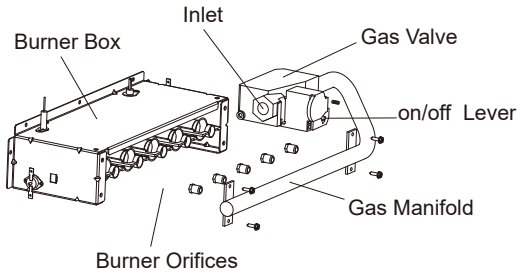

Fig. 8-1 Gas Manifold Exploded View

To Convert From Natural to LP Gas on Gas Valve

1.Remove regulator (gas valve) cover screw
2.Remove regulator adjustment screw (beneath the cover screw)
3.Remove natural gas spring from regulator sleeve.
4.Insert the LP spring included in the conversion kit into sleeve
5.Replace the adjustment screw and adjust the outlet pressure to manufacturer's specified outlet pressure (Refer to Fig 34 and Section
10.5 and 10.6 for outlet pressure tap location and pressure measurement)
6.Replace the regulator cover screw
7.Attach the WARNING label (provided in the kit) to the gas valve, attach small round LP label to the top of regulator cover screw.
8.Fill required blanks in provided conversion label and attach it to appropriate location on furnace case.

8.4 Gas Piping Connections

To avoid possible unsatisfactory operation or equipment damage due to underfiring of equipment, use the proper size of natural gas piping needed when running pipe from the meter/tank to the furnace.

When sizing a trunk line, be sure to include all appliances which will operate simultaneously. (See Table 8-3)

The gas piping supplying the furnace must be properly sized based on the gas flow required, specific gravity of the gas, and length of the run. The gas line installation must comply with local codes, or in their absence, refer to the latest version of NFPA54/ANSI Z223.1 for US and the latest version of CSA B149.1 for Canada.

Table 8-3 NaturalGas Capacity of Pipe In Cubic Feet of Gas Per Hour (CFH)

Nominal iron pipe size in(mm)	Internal DIA. in(mm)	Length of pipe-ft(m)				
		10 (3.0)	20 (6.0)	30 (9.1)	40 (12.1)	50 (15.2)
1/2(12.7)	0.622(15.8)	175	120	97	82	73
3/4(19.0)	0.824(20.9)	360	250	200	170	151
1(25.4)	1.049(26.6)	680	465	375	320	285
1-1/4(31.8)	1.380(35.0)	1400	950	770	660	580
1-1/2(38.1)	1.610(40.9)	2100	1460	1180	990	900

(Pressure 0.5 psig or less and pressure drop of 0.3" W.C.; Based on 0.60 Specific GravityGas)

$$CFH = \frac{\text{Btu/h Furnace input}}{\text{Heating Value of Gas (Btu/Cubic Foot)}}$$

To connect the furnace to the building's gas piping, the installer must supply a ground joint union, drip leg, manual shutoff valve, and line and fittings to connect to gas valve. In some cases, the installer may also need to supply a transition piece from 1/2" pipe to a larger pipe size.

The following stipulations apply when connecting gas piping.

- Use black iron or steel pipe and fittings for the building piping.
- Use pipe joint compound on male threads only. Pipe joint compound must be resistant to the action of the fuel used.
- Use ground joint unions.
- Install a drip leg to trap dirt and moisture before it can enter the gas valve. The drip leg must be a minimum of three inches long.
- Install a 1/8" NPT pipe plug fitting, accessible for test gage connection, immediately upstream of the gas supply connection to the furnace.
- Use two pipe wrenches when making connection to the gas valve to keep it from turning. The orientation of the gas valve on the manifold must be maintained as shipped from the factory.
- Install a manual shutoff valve between the gas meter and unit within six feet of the unit. If a union is installed, the union must be downstream of the manual shutoff valve, between the shutoff valve and the furnace.
- Tighten all joints securely.
- Connect the furnace to the building piping by one of the following methods:
  Rigid metallic pipe and fittings.

  Semi-rigid metallic tubing and metallic fittings. Aluminum alloy tubing must not be used in exterior locations.

  Use listed gas appliance connectors in accordance with their instructions. Connectors must be fully in the same room as the furnace.

  Protect connectors and semi-rigid tubing against physical and thermal damage when installed. Ensure aluminum-alloy tubing and connectors are coated to protect against external corrosion when in contact with masonry, plaster, or insulation,or subjected to repeated wetting by liquids such as water (except rain water), detergents, or sewage.

When the gas piping enters through the right side of the furnace, the installer must supply the following fittings (starting from the gas valve):

- 90 degree elbows (2).
- Close nipple.
- Straight pipe to reach the exterior of the furnace.

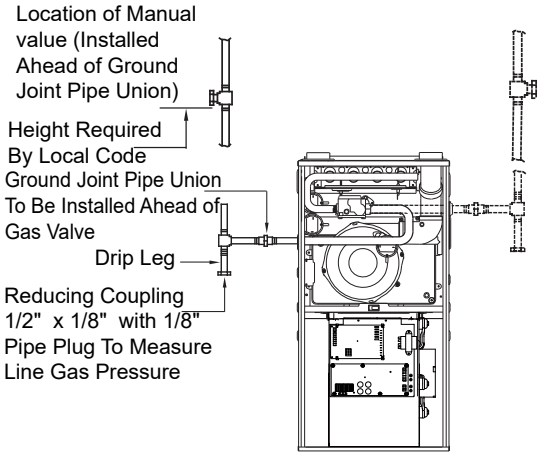

Fig. 8-2 Typical Gas Pipe Arrangement

A ground joint union, drip leg, and manual shutoff valve must also be supplied by the installer. In some cases, the installer may also need to supply a transition piece from 1/2" to another pipe size.
When the gas piping enters through the left side of the furnace, the installer must supply the following fittings (starting from the gas valve):

- Straight pipe to reach the exterior of the furnace.
- A ground joint union, drip leg, and manual shutoff valve must also be supplied by the installer. In some cases, the installer may also need to supply a transition piece from 1/2 inch to another pipe size.

8.5 Gas Piping Checks

Before placing unit in operation, leak test the unit and gas connections.

⚠ WARNING

FIRE AND EXPLOSION HAZARD

Failure to follow this warning could cause personal injury, death and/or property damage.
Never test for gas leaks with an open flame. Use a commercially available soap solution made specifically for the detection of leaks to check all connections.

Check for leaks using an approved chloride-free soap and water solution, an electronic combustible gas detector, or other approved testing methods.

NOTE

Never exceed specified pressures for testing. Higher pressure may damage the gas valve and cause subsequent overfiring, resulting in heat exchanger failure.

Disconnect this unit and shutoff valve from the gas supply piping system before pressure testing the supply piping system with pressures in excess of 1/2 psig (3.48 kPa).

This unit must be isolated from the gas supply system by closing its manual shutoff valve before pressure testing of gas supply piping system with test pressures equal to or less than 1/2 psig (3.48 kPa).

9 ELECTRICAL CONNECTIONS

⚠ WARNING

ELECTRICAL SHOCK HAZARD

Failure to follow this warning could result in personal injury or death.
Blower access panel door switch opens 115V power to control.
No component operation can occur. Do not bypass or close switch with panel removed.

See Fig. 33 for field wiring diagram showing typical field 115V wiring.
Check all factory and field electrical connections for tightness.
Field-supplied wiring shall conform with the limitations of 63°F (35°C) rise.

⚠ WARNING

ELECTRICAL SHOCK AND FIRE HAZARD

Failure to follow this warning could result in personal injury, death, or property damage.
The cabinet MUST have an uninterrupted or unbroken ground according to NEC ANSI/NFPA 70-2008 and Canadian Electrical Code CSA C22.1 or local codes to minimize personal injury if an electrical fault should occur.
This may consist of electrical wire, conduit approved for electrical ground or a listed, grounded power cord (where permitted by local code) when installed in accordance with existing electrical codes. Refer to the power cord manufacturer's ratings for proper wire gauge. Do not use gas piping as an electrical ground.

⚠ CAUTION

FURNACE MAY NOT OPERATE

Failure to follow this caution may result in intermittent furnace operation.
Furnace control must be grounded for proper operation or else control will lock out. Control must remain grounded through green/yellow wire routed to gas valve and manifold bracket screw.

9.1 115V wiring

Verify that the voltage, frequency, and phase correspond to that specified on unit rating plate. Also, check to be sure that service provided by utility is sufficient to handle load imposed by this equipment. Refer to rating plate or Table 9-1 for equipment electrical specifications.

U.S. installations: Make all electrical connections in accordance with National Electrical Code (NEC) ANSI/NFPA 70-2008 and any local codes or ordinances that might apply. Canadian installations: Make all electrical connections in accordance with Canadian Electrical Code CSA C22.1 or authorities having jurisdiction.

⚠ WARNING

FIRE HAZARD

Failure to follow this warning could result in personal injury, death, or property damage.
Do not connect aluminum wire between disconnect switch and furnace. Use only copper wire.

Use a separate, fused branch electrical circuit with a properly sized fuse or circuit breaker for this furnace. See Table 9-1 for wire size and fuse specifications. A readily accessible means of electrical disconnect must be located within sight of the furnace.

NOTE

Proper polarity must be maintained for 115V wiring. If polarity is incorrect, control LED status indicator light will flash 9 times a cycle and furnace will NOT operate.

JUNCTION BOX RELOCATION

NOTE

If factory location of J-Box is acceptable, go to next section (ELECTRICAL CONNECTION TO J-BOX).

On 14" wide casing models, the J-Box shall not be relocated to other side of furnace casing when the vent pipe is routed within the casing.

1. Remove and save two screws holding J-Box. (See Fig. 8-1.)

NOTE

The J-Box cover need not be removed from the J-Box in order to move the J-Box. Do NOT remove green ground screw inside J-Box. The ground screw is not threaded into the casing flange and can be lifted out of the clearance hole in casing while swinging the front edge of the J-Box outboard of the casing.

2. Cut wire tie on loop in furnace wires attached to J-box.
3. Move J-Box to desired location.
4. Fasten J-Box to casing with two screws removed in Step 1.
5. Route J-Box wires within furnace away from sharp edges, rotating parts and hot surfaces.

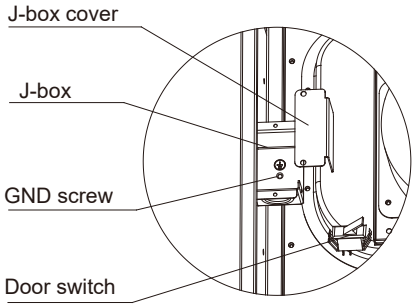

Fig. 9-1 J-box

9.2 Electrical Connection To J-box

Field-Supplied Electrical Box on Furnace J-Box Bracket See Fig. 9-2

1. Remove cover from furnace J-Box.
2. Attach electrical box to furnace J-Box bracket with at least two field-supplied screws through holes in electrical box into holes in bracket. Use blunt-nose screws that will not pierce wire insulation.
3. Route furnace power wires through holes in electrical box and J-Box bracket, and make field-wire connections in electrical box. Use best practices (NEC in U.S. and CSA C22.1 in Canada) for wire bushings, strain relief, etc.
4. Route and secure field ground wire to green ground screw on J-Box bracket, or the furnace will fail to operate.
5. Connect line voltage leads as shown in Fig. 9-3.
6. Reinstall cover to J-Box. Do not pinch wires between cover and bracket.

⚠ WARNING

FIRE OR ELECTRICAL SHOCK HAZARD

Failure to follow this warning could result in personal injury, death, or property damage.
If field-supplied manual disconnect switch is to be mounted on furnace casing side, select a location where a drill or fastener cannot damage electrical or gas components.

Select and remove a hole knockout in the casing where the electrical box is to be installed.

NOTE

Check that duct on side of furnace will not interfere with installed electrical box.

1. Remove the desired electrical box hole knockout and position the hole in the electrical box over the hole in the furnace casing.
2. Fasten the electrical box to casing by driving two field-supplied screws from inside electrical box into casing steel.
3. Remove and save two screws holding J-Box. (See Fig. 9-1.)
4. Pull furnace power wires out of l/2-in (13 mm) diameter hole in J-Box. Do not loosen wires from strain-relief wire-tie on outside of J-Box.
5. Route furnace power wires through holes in casing and electrical box and into electrical box.
6. Pull field power wires into electrical box.
7. Remove cover from furnace J-Box.
8. Route field ground wire through holes in electrical box and casing, and into furnace J-Box.
9. Reattach furnace J-Box to furnace casing with screws removed in Step 4.
10. Secure field ground wire to J-Box green ground screw.
11. Complete electrical box wiring and installation.
12. Connect line voltage leads as shown in Fig. 9-3. Use best practices (NEC in U.S. and CSA C22.1 in
13. Canada) for wire bushings, strain relief, etc.
    Reinstall cover to J-Box. Do not pinch wires between cover and bracket.

9.3 Power Cord Installation In Furnace J-box

NOTE

Power cords must be able to handle the electrical requirements listed in Table 9-1. Refer to power cord manufacturer's listings.

1. Remove cover from J-Box.
2. Route listed power cord through 7/8-in (22 mm) diameter hole in J-Box.
3. Secure power cord to J-Box bracket with a strain relief bushing or a connector approved for the type of cord used.
4. Secure field ground wire to green ground screw on J-Box bracket.
5. Connect line voltage leads as shown in Fig. 9-3.
6. Reinstall cover to J-Box. Do not pinch wires between cover and bracket.

9.4 Bx Cable Installation In Furnace J-box

1. Remove cover from J-Box.
2. Route BX cable into 7/8-in (22 mm) diameter hole in J-Box.
3. Secure BX cable to J-Box bracket with connectors approved for the type of cable used.
4. Secure field ground wire to green ground screw on J-Box bracket.
5. Connect line voltage leads as shown in Fig. 9-3.
6. Reinstall cover to J-Box. Do not pinch wires between cover and bracket.

9.5 24V Wiring

Make field 24V connections at the 24V terminal strip. (See Fig. 9-2.)
Connect terminal Y/Y2, Y1 as shown in Fig. 32 for proper cooling operation. Connect terminal W/W1, Y2 as shown in Fig. 32 for proper heating operation. Use only AWG No. 18, color-coded, copper thermostat wire.
The 24V circuit contains an automotive-type, 5-amp..max fuse located on the control. Any direct shorts during installation, service, or maintenance could cause this fuse to blow. If fuse replacement is required, use a 5-amp.. max fuse of identical size.

9.6 Accessories (Field Supplied)

1. Electronic Air Cleaner (EAC)
   Connect an accessory Electronic Air Cleaner (if used) using l/4-in female quick connect terminals to the two male 1/4-in quick-connect terminals on the control board marked EAC-H and NEUTRALS. The terminals are rated for 115V AC, 1.0 amps maximum and are energized during blower motor operation. (See Fig. 9-2.)
2. Humidifier (HUM)
   Connect an accessory 115V AC, 0.5 amp. maximum humidifier (if used) to the 1/4-in male quick-connect HUM-H terminal and NEUTRALS terminal on the control board. The HUM terminal is energized when gas valve relay is energized. (See Fig.9-2)

9.7 Grounding

The furnace must be electrically grounded in accordance with local codes or, in the absence of local codes, with the National Electrical Code, ANSI/NFPA 70, and /or the Canadian Electrical Code, CSA C22.1, Part 1, if an external electrical source is utilized.

Table 9-1 Ratings & Physical / Electrical Data

Input		Output		Nominal Airflow	MAX. Unit Amps	AFUE	Air Temp. Rise		Max. Over-Current Protection Amps	Min. Wire Size (awg) @ 75 ft	Max. Outlet Air Temp	
MBH	kW	MBH	kW	CFM			°F	°C			°F	°C
60B	17.6	57	16.4	1200	8	96	30-60	17-33	15	14	160	71
80B	23.4	76	22.3	1200	8	96	35-65	19-36	15	14	165	74
80C	23.4	76	22.3	1600	7.8	96	35-65	19-36	15	14	165	74
100C	29.3	95	27.8	2000	11.5	96	35-65	19-36	20	12	165	74
100D	23.4	95	27.8	2000	10.5	96	35-65	19-36	20	12	165	74
120D	35.2	106.5	33.7	2000	10.5	96	40-70	22-39	20	12	170	77

Annual Fuel Utilization Efficiency (AFUE) numbers are determined in accordance with DOE Test procedures.

National Electrical Code (NFPA-70-latest edition) and all local code

The furnace shall be installed so that the electrical components are protected from water.

W2 DELAY		
DIP SW		NOMINAL (MINUTES)
S1-1	S1-2	
*OFF	OFF	OFF
ON	OFF	10
OFF	ON	AUTO
ON	ON	20

HEAT OFF DELAY		
DIP SW		NOMINAL (SECONDS)
S2-1	S2-2	
*OFF	OFF	90
ON	OFF	120
OFF	ON	150
ON	ON	180

COOL OFF DELAY		
DIP SW		NOMINAL (SECONDS)
S2-3	S2-4	
*OFF	OFF	60
ON	OFF	90
OFF	ON	120
ON	ON	150

Option Switch Positions

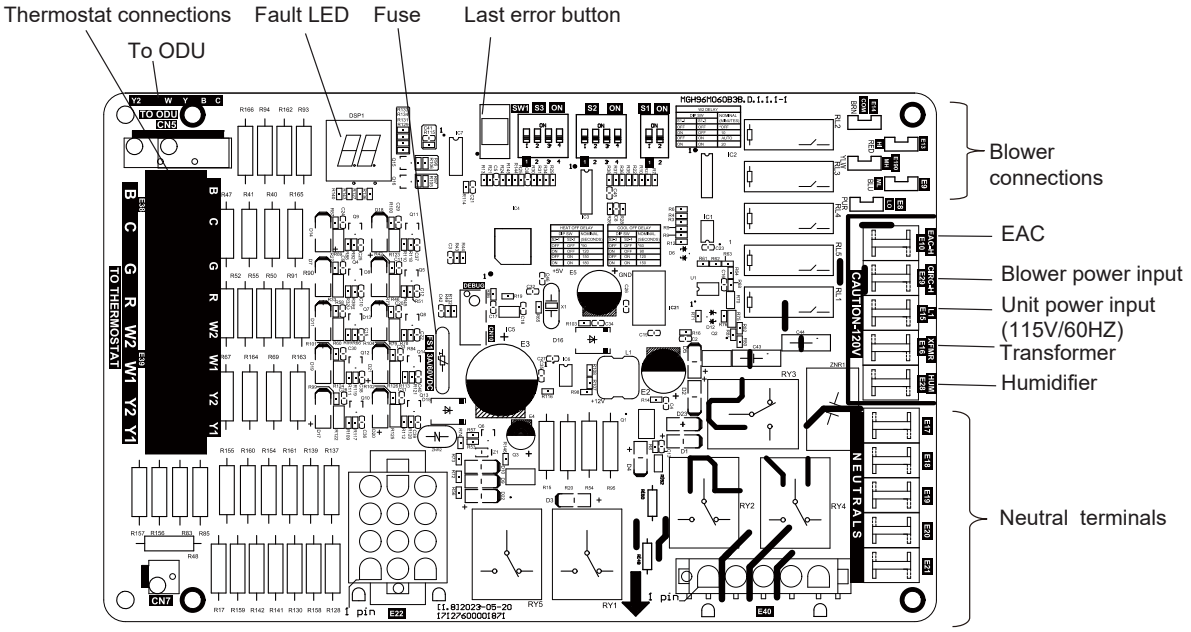

SERIES OF PRODUCTS		
SW2-4	OFF	80% GAS FURNACE
	ON	96% GAS FURNACE

96% MACHINE TYPE			
DIP SW			TYPE
SW2-1	SW2-2	SW2-3	
OFF	OFF	OFF	*
OFF	OFF	ON	*
OFF	ON	OFF	60B,80B
OFF	ON	ON	80C
ON	OFF	OFF	100C
ON	OFF	ON	100D/120D

FAN SPEED		
SW1-1	OFF	NORMAL SPEED
	ON	SLOW SPEED
SW1-2	OFF	RESERVED
	ON	WRONG SETTING

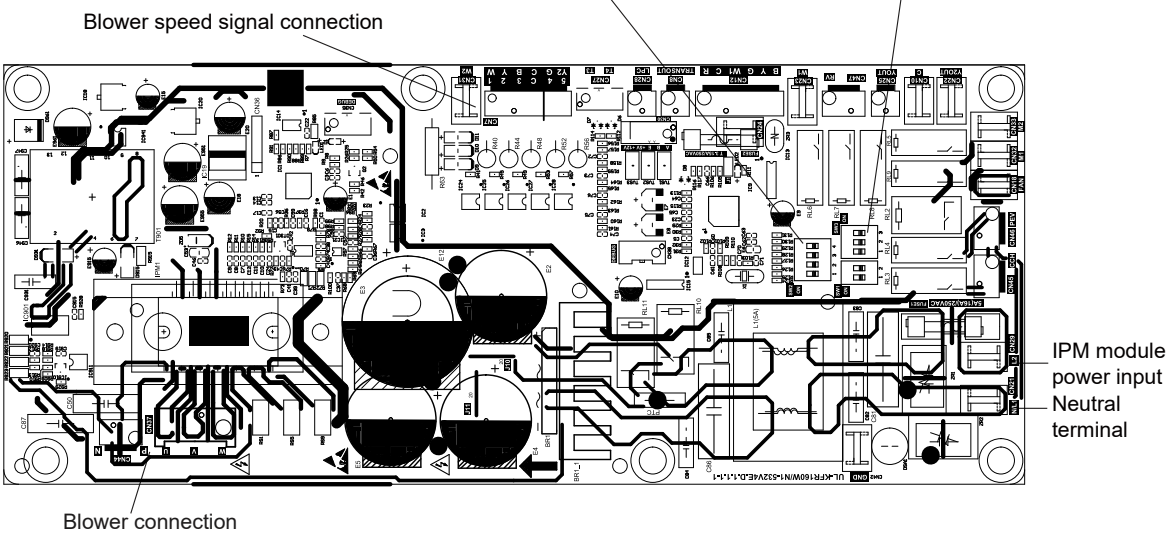

Fig. 9-2 Furnace Control module (for reference)

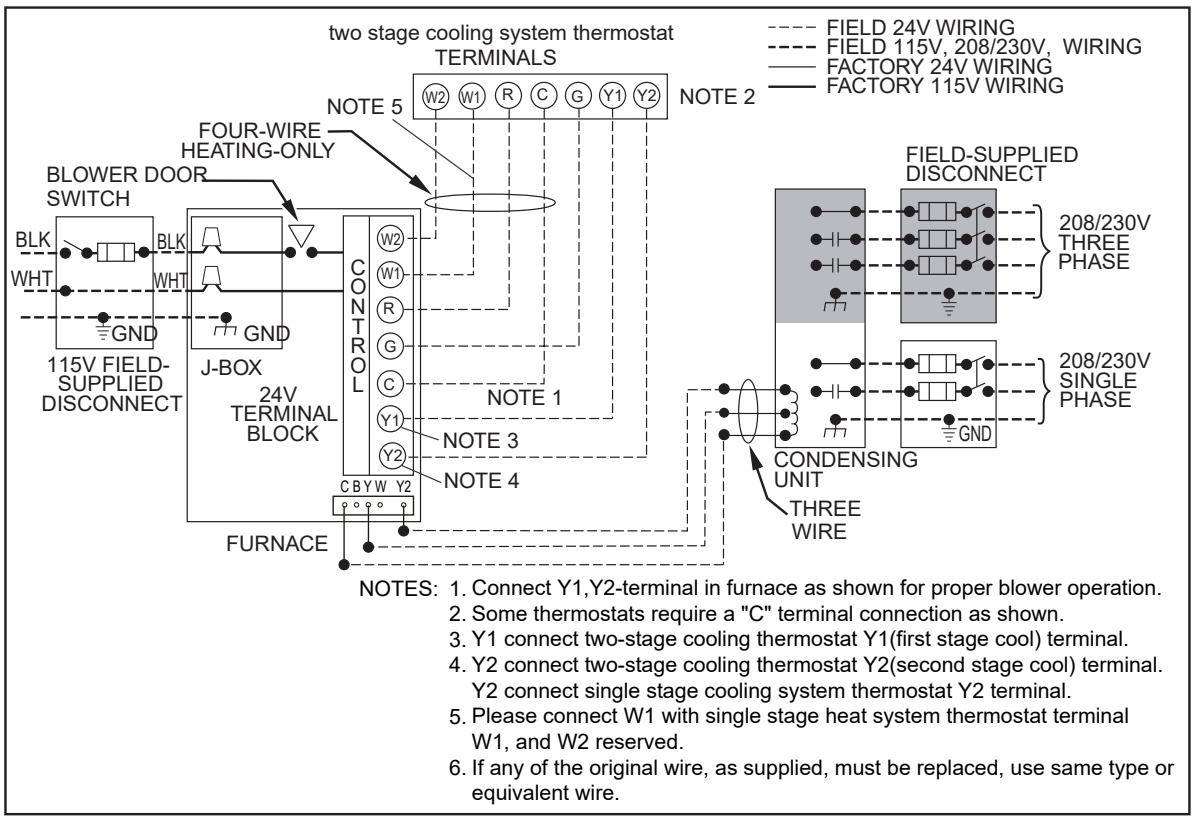

NOTES:
1. Connect Y1,Y2-terminal in furnace as shown for proper blower operation.
2. Some thermostats require a "C" terminal connection as shown.
3. Y1 connect two-stage cooling thermostat Y1(first stage cool) terminal.
4. Y2 connect two-stage cooling thermostat Y2(second stage cool) terminal. Y2 connect single stage cooling system thermostat Y2 terminal.
5. Please connect W1 with single stage heat system thermostat terminal W1, and W2 reserved.
6. If any of the original wire, as supplied, must be replaced, use same type or equivalent wire.

Fig.9-3 Heating and Cooling Application Wiring Diagram with 2-Stage Heating Thermostat

9.8 R454B Leak Mitigation Kit for use with Furnace and Condensing Units

This furnace is capable of functioning with a mitigation system for R454B.Refer to the coil installation instructions for proper wiring instructions for a leak mitigation control and sensor function with a full system.

10 START-UP, ADJUSTMENT, AND SAFETY CHECK

10.1 General

⚠ WARNING

FIRE HAZARD

Failure to follow this warning could result in personal injury, death and/or property damage. This furnace is equipped with manual reset limit switches in the gas control area. The switches open and shut off power to the gas valve if a flame rollout or overheating condition occurs in the gas control area. DO NOT bypass the switches. Correct inadequate combustion air supply problem before resetting the switches.

⚠ CAUTION

Failure to follow this caution may result in personal injury. Sheet metal parts may have sharp edges or burrs. Use care and wear appropriate protective clothing, safety glasses and gloves when handling parts and servicing furnaces.

1. Maintain 115V wiring and ground. Improper polarity will result in rapid flashing LED and no furnace operation. (See Fig. 33)
2. Make thermostat wire connections at the 24-V terminal block on the furnace control. Failure to make proper connections will result in improper operation. (See Fig. 33)
3. Gas supply pressure to the furnace must be greater than 4.5-in. wc (0.16 psig) but not exceed 14-in. we (0.5 psig).
4. Check all manual-reset switches for continuity.
5. Install blower compartment door. Door must be in place to operate furnace.
6. Replace outer door.

10.2 Start-up Procedures

⚠ WARNING

FIRE AND EXPLOSION HAZARD

Failure to follow this warning could cause personal injury, death and/or property damage. Never test for gas leaks with an open flame. Use a commercially available soap solution made specifically for the detection of leaks to check all connections.

1. Purge gas lines after all connections have been made.
2. Check gas lines for leaks.

⚠ WARNING

ELECTRICAL SHOCK HAZARD

Failure to follow this warning could result in personal injury, or death.
Blower access door switch opens 115V power to control. No component operation can occur unless switch is closed.
Caution must be taken when manually closing this switch for service purposes.

3. This furnace is also equipped with a self-diagnosing electronic control module. In the event a furnace component is not operating properly, the control module LED will flash on and off in a factory programmed sequence, depending on the problem encountered.
   This light can be viewed through the observation window in the blower access door. Refer to the Troubleshooting Chart for further explanation of the lighting codes.
   Follow the start-up and adjustment items, refer to further information in Operational Checks.

10.3 Furnace Start-up

1. Close the manual gas shutoff valve external to the furnace.
2. Turn off the electrical power to the furnace.
3. Set the room thermostat to the lowest possible setting.
4. Remove the burner compartment door.

NOTE

This furnace is equipped with an ignition device which automatically lights the burner. Do not try to light the burner by hand.

5. Push the switch to the OFF position.
6. Wait five minutes to clear out any gas. Then smell for gas, including near the floor.
7. If gas can be smelled following the five minute waiting period in Step 6. Please open the doors and Windows, and seek professional after-sales personnel to inspect the leak point. If you do not smell gas after five minutes. Push the switch to the ON position.

⚠ WARNING

FIRE AND EXPLOSION HAZARD

Failure to follow this warning could cause personal injury, death and/or property damage. Never test for gas leaks with an open flame. Use a commercially available soap solution made specifically for the detection of leaks to check all connections.

8. Replace the door on the front of the furnace.
9. Open the manual gas valve external to the furnace.
10. Turn on the electrical power supply to the furnace.
11. Set the room thermostat to the desired temperature.

NOTE

There is an approximate 37 second delay between thermostat energizing and burner firing.

FURNACE SHUTDOWN
1. Set the thermostat to lowest setting.
2. Turn off the electrical power supply to the furnace.
3. Push switch to the OFF position.
4. Close manual gas shutoff valve external to the furnace.
5. Replace the door on the unit.

10.4 Sequence of Operation

NOTE

Furnace control must be grounded for proper operation or control will lock out. Control is grounded through green wire routed to gas valve and manifold bracket screw. Follow the sequence of operation through the different modes.

Read and follow the wiring diagram very carefully.
The blower door must be installed for power to be conducted through the blower door interlock switch to the furnace control CPU, transformer, inducer motor, blower motor, hot--surface igniter, and gas valve.

1. Heating mode

In a typical system, a call for first stage heat is initiated by closing the W1 thermostat contacts. The inducer blower is energized at high speed and the control waits for the low pressure switch contacts to close. The humidifier (optional) is also energized at this time. Once the low pressure switch contacts close, a 15-second pre-purge is initiated. Then the inducer changes to low speed and the 115V ignitor is powered. At the end of the ignitor warm-up time, the first stage of the two-stage manifold gas valve is energized (low fire). Flame must be detected within 4 seconds. If flame is detected, the 30-second HEAT delay-to-fan-on period begins. After the delay-to-fan-on period ends, the control will energize the circulator fan at low heat speed.
The electronic air cleaner (optional) will also energize at this time.
For a two-stage thermostat, a call for second stage heat (W1 and W2) after a call for first stage heat will energize the inducer at high speed and the circulator at high heat speed. The second stage pressure switch contacts will close and energize the second stage gas valve (high fire). For a single-stage thermostat, when a call for heat occurs (W1), a 10, 20 minute or auto mode heat staging timer will be activated (timing is selectable with option switches S1-1 and S1-2 positions). Following this delay, the second stage heat is energized as above. The AUTO model algorithm is a method of energizing the second stage gas valve based on the recent average of the heating duty cycle. During a typical heating day, the low to high stage delay is determined by using the average calculated duty cycle from the table below. Once the specified delay time has expired the second stage valve will be energized. See the table below for the different duty cycles.

Average Calculated Duty Cycle % Equals	Or less than	Low to High Stage Delay	Demand
0	38	12 minutes	Light
38	50	10 minutes	Light to Average
50	62	7 minutes	Average
62	75	5 minutes	Average to Heavy
75	88	3 minutes	Heavy Light
88	100	1 minutes	Heavy

When the second stage of the thermostat is satisfied, the inducer motor is reduced to low speed and the second stage gas valve is de-energized. On the control, the circulator will remain at high heat speed for 30 seconds following the opening of the second stage gas valve and then is reduced to low heat speed. When the first stage of the thermostat is satisfied, the first stage gas valve is de-energized and the HEAT delay-to-fan-off begins timing. The inducer will postpurge for an additional 15 seconds, then the inducer and humidifier will turn off. Upon completion of the HEAT delay-to-fan-off period, the circulator is turned off. The electronic air cleaner on the control is also de-energized at this time.
If flame is not detected during the trial-for-ignition period or if the flame is detected/sensed and then lost before completion of 10 seconds of establishment, the gas valve is de-energized, the ignitor is turned off, and the control goes into the “retry” sequence. The “retry” sequence provides a 60-second wait with the inducer interpurge following an unsuccessful ignition attempt (flame not detected). After this wait, the ignition attempt is restarted. Two retries will be attempted before the control goes into system lockout. If flame is established after ignition, the controller will clear the ignition attempt (or retry) counter. A momentary loss of gas supply, flame blowout, or a shorted or open condition in the flame probe circuit will be sensed within 2.0 seconds. The gas valve will de-energize and the control will restart the ignition sequence. Recycles will begin and the burner will operate normally if the gas supply returns, or the fault condition is corrected, before the last ignition attempt. Otherwise, the control will go into system lockout. If the control has gone into system lockout, it may be possible to reset the control by a momentary power interruption of 10 seconds or longer.

Refer to SYSTEM LOCKOUT AND DIAGNOSTIC FEATURES.

TIMING SPECIFICATIONS
(All times are in seconds, unless noted otherwise)

Event	Definition	Time Default unit second
Pre-purge Time	The period of time intended to allow for the dissipation of any unburned gas or residual products of combustion at the beginning of a furnace operating cycle prior to initiating ignition	15
Igniter Warm-up Time	The length of time allowed for the igniter to heat up prior to the initiation of gas flow.	17
Trial for Ignition Period (TFI)	The period of time between initiation of gas flow and the action to shut off the gas flow in the event of failure to establish proof of the supervised ignition source or the supervised main burner flame.	4
Ignition Activation Period (IAP)	The period of time between energizing the main gas valve and deactivation of the ignition means prior to the end of TFI	3
Retries	The additional attempts within the same thermostat cycle for ignition when the supervised main burner flame is not proven within the first trial for ignition period.	2 times
Valve Sequence period	Valve sequence period equals 4 seconds trial for ignition period x (1 initial try + 2 retries) + 12 seconds.	12
Inter-purge	The period of time intended to allow for the dissipation of any unburned gas or residual products of combustion between the failed trial for ignition and the retry period.	60
Post-purge Time	The period of time intended to allow for the dissipation of any unburned gas or residual products of combustion at the end of a furnace burner operating cycle. Post-purge begins at the loss of flame sense.	15
Lock-Out Time	ANSI standard rated module timing.	300
Heat Delay-To-Fan-On	The period of time between proof of the supervised main burner flame and the activation of the blower motor at Heat speed.	30
Heat Delay-To-Fan-Off*	The period of time between the loss of a call for heat and the deactivation of the blower motor at Heat speed.	90/120/150/180
Cool Delay-To-Fan-On	The period of time after a thermostat demand for cool before energizing the circulator blower motor at Cool speed.	1
Cool Delay-To-Fan-Off	The period of time between the loss of a call for cool and the deactivation of the blower motor at Cool speed.	60/90/120/150
Automatic Reset Time	After one (1) hour of internal or external lockout, the control will automatically reset itself and go into an auto restart purge for 60 seconds.	60 minutes

*These times will vary depending on option switch position.

When using a single stage thermostat, second stage delay is based on the setting of switch S1-1, S1-2 shown below.

OPTION SWITCHES S1-1 & S1-2 POSITIONS

2nd Stage delay for single stage thermostats		
Delay Time:	On "S1" set switch #	
	1	2
Off*	Off	Off
10 min	On	Off
Auto min	Off	On
20 min	On	On

*Factory default setting– two stage thermostat

2. Cooling Mode

In a typical single stage cooling system (Y connection), a call for cool is initiated by closing the thermostat contacts. This energizes the compressor and the electronic air cleaner (optional).
The circulator will be energized at cool speed after the COOL delay-to-fan-on period. After the thermostat is satisfied, the compressor is de-energized and the COOL delay-to-fan-off period begins. After the COOL delay-to-fan-off period ends, the circulator and the electronic air cleaner are de-energized.

3. FAN Mode

If the thermostat fan switch is moved to the ON position, the circulator fan (low heat speed) and the electronic air cleaner (optional) are energized. When the fan switch is returned to the AUTO position, the circulator and electronic air cleaner are de-energized.

10.5 Gas Manifold Pressure Measurement And Adjustment

⚠ CAUTION

To prevent unreliable operation or equipment damage, the gas manifold pressure must be as specified on the unit rating palte. Only minor adjustments should be made by adjusting the gas valve pressure regulator.

This valve is shipped from the factory with the regulator preset Consult the appliance rating plate to ensure burner manifold pressure is as specified. If another outlet pressure is required, follow these steps. (See Table 10-1 and Fig. 10-1)

1. Turn OFF all electrical power to the system.
2. Using a 3/32 inch hex wrench, loosen outlet pressure tap (boss) screw one turn. Do not remove screw.
3. Attach a hose and manometer to the potlet pressure boss of valve to over lap at least 3/8"
4. Turn ON system power and set thermostat to a call for heat.
5. Using a leak detection solution or non-chlorine soap suds, check for leaks at hose connection. Bubbles forming indicate a leak. SHUT OFF GAS AND FIX ALL LEAKS IMMEDIATELY!
6. Remove regulator screw cover. Turn regulator screw either clockwise to increase pressure or counter clockwise to decrease. Always adjust regulator to provide the correct pressure according to the original equipment manufacturer specifications listed on the appliance rating plate.
7. Replace regulator screw cover and finger-tighten securely.
8. Turn OFF all electrical power to the system.
9. Remove manometer and hose from outlet pressure tap.
10. Tighten outlet pressure tap clockwise 7 in-lbs minimum to seal port.
11. Turn ON system power and set thermostat to call for heat.
12. Using a leak detection solution or non-chlorine soap suds, 1` check for leaks at hose connection. Bubbles forming indicate a leak. SHUT OFF GAS AND FIX ALL LEAKS IMMEDIATELY!

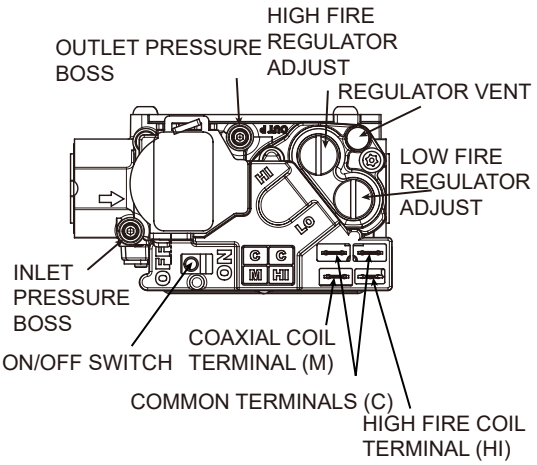

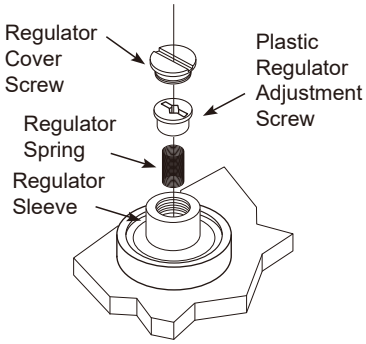

Fig. 10-1 Gas Valve and Regulator Adjustment

Measure gas manifold pressure with burners firing. Adjust manifold pressure per the Manifold Gas Pressure table.

Table 10-1 Manifold Gas Pressure

Manifold Gas Pressure				
Input Rating Btu/h	Range		Orifice	
	Nature Gas	Propane Gas	Nature Gas	Propane Gas
60B	3.5"W.C	10.0"W.C	45#	55#
80B	3.5"W.C	10.0"W.C	45#	55#
80C	3.5"W.C	10.0"W.C	45#	55#
100C	3.5"W.C	10.0"W.C	45#	55#
100D	3.5"W.C	10.0"W.C	45#	55#
120D	3.5"W.C	10.0"W.C	45#	55#

The final manifold pressure must not vary more than ± 0.3 w.c. from specified manifold pressure.
Any necessary major changes in gas flow rate should be made by changing the size of the burner orifice.

10.6 Gas Input Rate Measurement (Natural Gas Only)

The gas input rate to the furnace must never be greater than that specified on the unit rating plate. To measure natural gas input using the gas meter, use the following procedure.

1. Turn OFF the gas supply to all other gas-burning appliances except the furnace.
2. While the furnace is operating, time and record one complete revolution of the smallest gas meter dial.
3. Calculate the number of seconds per cubic foot (sec/ft^3) of gas being delivered to the furnace. If the dial is a one cubic foot dial, divide the number of seconds recorded in step 2 by one. If the dial is a two cubic foot dial, divide the number of seconds recorded in step 2 by two.
4. Calculate the furnace input in Btus per hour (Btu/h). Input equals the installation's gas heating value multiplied by a conversion factor (hours to seconds) divided by the number of seconds per cubic foot. The measured input must not be greater than the input indicated on the unit rating plate.

EXAMPLE:
Installation's gas heating (HTG) value: 1,000 Btu/cu.ft (Obtained from gas supplier)
Installation's seconds per cubic foot: 34 sec/cu.ft
Conversion Factor (hours to seconds): 3600 sec/hr
Input = (Htg. value x 3600) + seconds per cubic foot
Input = (1,000 Btu/cu.ft x 3600 sec/hr) + 34 sec/cu.ft
Input = 106,000 Btu/h
This measured input must not be greater than the input indicated on the unit rating plate.

5. Turn ON gas and relight appliances turned off in step 1. Ensure all the appliances are functioning properly and that all pilot burners are operating.

10.7 Temperature Rise Adjustment

Air temperature rise is the temperature difference between supply and return air. The proper amount of temperature rise is usually obtained when the unit is operated at the rated input with the "as shipped" blower speed. If the correct amount of temperature rise is not obtained, it may be necessary to change the blower speed.

An incorrect temperature rise can cause condensing in or overheating of the heat exchanger. Determine and adjust the temperature rise as follows. The temperature rise must be within the range specified on the rating plate.

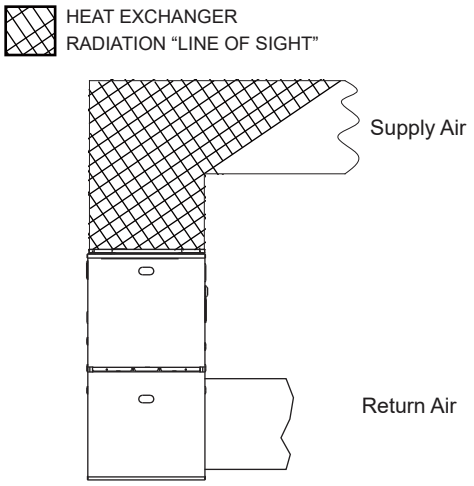

Fig . 10-2 Temperature Rise Measurement

Temperature Rise Adjustment

1. Operate furnace with burners firing approximately 15 minutes. Ensure all registers are open and all duct dampers are in their final (fully or partially open) position.
2. Place thermometers in the return and supply ducts as close to the furnace as possible. Thermometers must not be influenced by radiant heat by being able to "see" the heat exchanger.
3. Subtract the return air temperature from the supply air temperature to determine the air temperature rise. Allow adequate time for thermometer readings to stabilize.
4. Adjust temperature rise by adjusting the circulator blower speed. Increase blower speed to reduce temperature rise.
   Decrease blower speed to increase temperature rise.
   Refer to the following section for speed changing details.

11 OPERATIONAL CHECKS

⚠ WARNING

FIRE, EXPLOSION, ELECTRICAL SHOCK, AND CARBON MONOXIDE POISONING HAZARD

To avoid personal injury or death. Do not remove any interal compartment covers or attempt any adjustment.
Electrical compartments are contained in both compartments. Contact a qualified service agent at once if an abnormal flame appearance should develop.

Burner Flame

The burner flames should be inspected with the burner compartment door installed. Flames should be stable, quiet, soft, and blue (dust may cause orange tips but they must not be yellow). Flames should extend directly outward from the burners without curling, floating,or lifting off, and should enter heat-exchanger tube.
Flames must not impinge on the sides of the heat exchanger firing tubes.

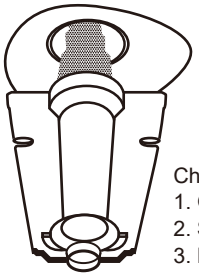

Check the burner flames for
1. Good adjustment
2. Stable, soft and blue
3. Not curling, floating, or lifting off

Fig. 11-1 Burner Flame

12 SAFETY CIRCUIT DESCRIPTION

12.1 General

A number of safety circuits are employed to ensure safe and proper furnace operation. These circuits serve to control any potential safety hazards and serve as inputs in the monitoring and diagnosis of abnormal function. These circuits are continuously monitored during furnace operation by the integrated control module.

12.2 Integrated Control Module

The integrated control module is an electronic device which controls all furnace operations. Responding to the thermostat, the module initiates and controls normal furnace operation, and monitors and addresses all safety circuits. If a potential safety concern is detected, the module will take the necessary precautions and provide diagnostic information through an LED.

12.3 Primary Limit

The primary limit control is located on the partition panel and monitors heat exchanger compartment temperature. It is an automatic reset, temperature sensor. The limit guards against the overheating resulting from insufficient air passing over the heat exchanger.

12.4 Rollout Limits

The rollout limit controls are mounted on the burner/manifold assembly and monitor the burner flame. They are manual-reset, temperature sensors. This limit guards against burner flames not being properly drawn into the heat exchanger.

12.5 Reverse Flow Limits

The reverse flow limit control is located on the blower scroll and monitors heat exchanger compartment temperature. It is an automatic reset, temperature sensor. The limit guards against the overheating resulting from insufficient air passing over the heat exchanger.

12.6 Overflow protection pressure switch(Overflow switch)

Overflow switch is a differential pressure switch. The shape and dimension of overflow switch is similar to two other pressure switches except it has two pressure ports, one in gray color (negative) and the other in black color (positive). The overflow switch is normally closed.
When condensate hoses or trap is blocked and condensate is stopped flowing to drain system, the level of condensate inside condensate collector box will rise to certain point. When condensate reaches certain level in condensate collector box, overflow switch will open and shut off the furnace. Make sure that black port (positive) is connected to the lower position tap on condensate collector box and gray port (negative) to higher tap of condensate box.
Manufacturer’s default setting is for installations on upflow and horizontal right only. For horizontal left installation, hoses for overflow switch are required to switch (see horizontal left installation).Connecting hoses incorrectly will result in failure to protect condensate overflow.

12.7 Pressure Switches

The pressure switches are normally-open, negative air pressure activated switches. They monitor the airflow (combustion air and flue products) through the heat exchanger via pressure taps located on the induced draft blower. These switches guard against insufficient airflow (combustion air and flue products) through the heat exchanger.

12.8 Flame Sensor

The flame sensor is a probe mounted to the burner/manifold assembly which uses the principle of flame rectification to determine the presence or absence of flame.

⚠ WARNING

FIRE, EXPLOSION OR CARBON MONOXIDE POISONING HAZARD

Failure to replace with proper control could result in fire, explosion or carbon monoxide poisoning.

This appliance uses a NEGATIVE PRESSURE REGULATED gas control.

Replace ONLY with the same model number or as specified by the manufacturer.

13 TROUBLESHOOTING

13.1 Electrostatic Discharge (ESD) Precautions

NOTE

Discharge body's static electricity before touching unit. An electrostatic discharge can adversely affect electrical components.

Use the following precautions during furnace installation and servicing to protect the integrated control module from damage.
By putting the furnace, the control, and the person at the same electrostatic potential, these steps will help avoid exposing the integrated control module to electrostatic discharge. This procedure is applicable to both installed and uninstalled (ungrounded) furnaces.

1. Disconnect all power to the furnace. Do not touch the integrated control module or any wire connected to the control prior to discharging your body's electrostatic charge to ground.
2. Firmly touch a clean, unpainted, metal surface of the furnace away from the control. Any tools held in a person's hand during grounding will be discharged.
3. Service integrated control module or connecting wiring following the discharge process in step 2. Use caution not to recharge your body with static electricity; (i.e.， do not move or shuffle your feet， do not touch ungrounded objects， etc.). If you come in contact with an ungrounded object， repeat step 2 before touching control or wires.
4. Discharge your body to ground before removing a new control from its container. Follow steps 1 through 3 if installing the control on a furnace. Return any old or new controls to their containers before touching any ungrounded object.The primary limit control is located on the primary limit control is located on the partition panel and de-energized.

13.2 Diagnostic Chart

Refer to the troubleshooting chart on the following pages for assistance in determining the source of unit operational problems.
The red diagnostic LED blinks to assist in troubleshooting the unit.
The number of blinks refer to a specific code.(See Table 13-1)

13.3 Resetting From Lockout

Furnace lockout results when a furnace is unable to achieve ignition after three attempts. It is characterized by a non-functioning furnace and a one flash diagnostic LED code from the red LED. If the furnace is in "lockout", it will (or can be) reset in any of the following ways.

1. Automatic reset. The integrated control module will automatically reset itself and attempt to resume normal operations following a one hour lockout period.
2. Manual power interruption. Interrupt 115 volt power to the furnace for at least 20 seconds.
3. Manual thermostat cycle. Lower the thermostat so that there is no longer a call for heat for 1 - 20 sec

NOTE

If the condition which originally caused the lockout still exists, the control will return to lockout. Refer to the diagnostic Chart for aid in determining the cause.

⚠ WARNING

FIRE, EXPLOSION AND ASPHYXIATION HAZARD

Improper adjustment, alteration, service, maintenance or installation can cause serious injury or death.

Read and follow instructions and precaution in User's Information Manual provided with this furnace.

Installation and service must be performed by a qualified service agency or the gas supplier.

Table 13-1 Troubleshooting Chart

Error code	Error/Condition	Comments/Troubleshooting
FE	Gas valve relay stuck close	Verify the gas valve is operating and shutting down properly. Flame in burner assemble should extinguish promptly at the end of the cycle. Check orifices and gas pressure
E1	Shorted pressure	Pressure switch stuck closed. Check switch function, verify inducer is turning off.
E2	Open pressure 1st-stage	Check pressure switch function and tubing. Verify inducer is turning on the pulling sufficient vacuum to engage switch.
E3	Open pressure 2nd-stage	Check pressure switch function and tubing. Verify inducer is turning on the pulling sufficient vacuum to engage switch.
E4	Open Pressure Switch locked	If the first stage pressure switch cycles 15 times (open, closed) during one call for heat from the thermostat the control will lockout. Check pressure switch for fluttering,inconsistent closure or poor vacuum pressure.
E5	Open thermal limit,Rollout switch	Verify continuity through rollout switch,primary limit,reverse flow limit circuit.
E6	Open thermal limit,Rollout switch (Afer 5 times)	
E7	Ignition failure locked	Failure to sense flame is often caused by carbon deposits on the flame sensor, a disconnected or shorted flame sensor lead or a poorly grounded furnace. Carbon deposits can be cleaned with emery cloth. Verify sensor is not contacting the burner and is located in a good position to sense flame. Check sensor lead for shorting and verify furnace is grounded properly.
E8	Flame loss locked	Check items for exceeded retries listed above and verify valve is not dropping out allowing flame to be established and then lost.
FL	Flame low	Low flame sense current is often caused by carbon deposits on the flame sensor, a poorly grounded furnace or a mis-aligned flame sense probe. Carbon deposits can be cleaned with emery cloth. Check for improve furnace and module ground. Verify sensor is located in or very near flame as specified by the appliance manufacturer.
Pr	Power reversed	Verify the control and furnace are properly grounded. Check and reverse polarity (primary) if incorrect.
Fo	Fuse open	Replace fuse of electric control board.
bE	Control board error	Replace electric control board.
nL	Signal error	Ensure the wire control signal refer to user manual.

1 Integrated control module will automatically attempt to reset from lockout after one hour.

2 LED Flash code will cease if power to the control module is interrupted through the disconnect or door switch.

14 SERVICE AND MAINTENANCE PROCEDURES

⚠ WARNING

ELECTRICAL SHOCK, FIRE OR EXPLOSION HAZARD

Failure to follow safety warnings exactly could result in dangerous operation, serious injury, death or property damage.

Improper servicing could result in dangerous operation, serious injury, death or property damage.

- Before servicing, disconnect all electrical power to furnace.
- When servicing controls, label all wires prior to disconnecting.
  Reconnect wires correctly.
- Verify proper operation after servicing.

⚠ WARNING

FIRE, EXPLOSION OR CARBON MONOXIDE POISONING HAZARD

Failure to replace with proper control could result in fire,explosion or carbon monoxide poisoning.

This appliance uses a NEGATIVE PRESSURE REGULATED gas control.

Replace ONLY with the same model number or as specified by the manufacturer.

14.1 Annual Inspection

The furnace should be inspected by a qualified installer, or service agency at least once per year. This check should be performed at the beginning of the heating season. This will ensure that all furnace components are in proper working order and that the heating system functions appropriately. Pay particular attention to the following items. Repair or service as necessary.

(a) All flue gas carrying areas external to the furnace (i.e. chimney, vent connector) are clear and free of obstructions.
(b) The vent connector is in place, slopes upward and is physically sound without holes or excessive corrosion.
(c) The return-air duct connection(s) is physically sound, is sealed to the furnace casing, and terminates outside the space containing the furnace.
(d) The physical support of the furnace is sound without sagging, cracks, gaps, etc, around the base so as to provide a seal between the support and the base.
(e) There are no obvious signs of deterioration of the furnace.
(f) The pilot and burner flames are in good adjustment (by comparison with pictorial sketches or drawings of the main burner flame and, if applicable, the pilot burner flame).

14.2 Filters

A return air filter is not supplied with this furnace; however, there must be a means of filtering all of the return air. The installer will supply filter(s) at the time of installation.

FILTER MAINTENANCE

Improper filter maintenance is the most common cause of inadequate heating or cooling performance. Filters should be cleaned (permanent) or replaced (disposable) every one month or as required.
When rep|acing a filter, it must be replaced with a filter of the same type and size.

Become familiar with filter location and procedures for removal, cleaning and replacing them. If help is needed, contact the installer of the furnace or a qualified servicer.

FILTER REMOVAL

Depending on the installation, differing filter arrangements can be applied. A media air filter or electronic air cleaner can be used as an alternate filter.

Follow the filter sizes given in the Recommended Minimum Filter size table to ensure proper unit performance.

For further details, see your distributor.

UPRIGHT FILTER REMOVAL

To remove filters from an external filter rack in an upright upflow installation, follow the directions provided with external filter rack kit.
Clean, wash and dry a permanent filter. When using a permanent filter, both sides should be sprayed with a dust adhesive as recommended on the adhesive container. Spray adhesives for use with permanent filters can be found at some hardware stores.
BE SURE AIRFLOW DIRECTION ARROW POINTS TOWARDS THE BLOWER.
Inspect filter. If your dirty filter is the disposable type, replace dirty filter with the same type and size filter. If your dirty filter is a permanent filter, clean as follows:

- Wash, rinse, and dry the permanent filters. Both sides should then be sprayed with a filter adhesive as is recommended on the adhesive container. Many hardware stores stock spray adhesives for use with permanent filters.
- If badly torn or uncleanable, these filters must be replaced by equal size permanent, high velocity filters. Throwaway filters must not be used as replacement for permanent filters. Under normal use, permanent filters should last for several years.

14.3 Induced Draft And Circulating Blower Motors

The bearings in the induced draft blower and circulaing blower motors are permanently lubricated by the manufacturer. No further lubrication is required. Check motor windings for accumulation of dust which may cause overheating. Clean as necessary.

14.4 Flame Sensor (Qualified Servicer Only)

Under some conditions， the fuel or air supply can create a nearly invisible coating on the flame sensor. This coating acts as an insulator causing a drop in the flame sense signal. If the flame sense signal drops too low. the furnace will not sense flame and will lock out. The flame sensor should be carefully cleaned by a qualified servicer using emery cloth or steel wool.

IGNITER (QUALIFIED SERVICER ONLY)

If the igniter and the surrounding air are at about 70°F and the igniter wires are not connected to any other electrical components, the resistance of the igniter should not exceed 200 ohms. If it does, the igniter should be replaced.

14.5 Burners

⚠ WARNING

FIRE, EXPLOSION, ELECTRICAL SHOCK, AND CARBON MONOXIDE POISONING HAZARD

To avoid personal injury or death. Do not remove any interal compartment covers or attempt any adjustment.
Electrical compartments are contained in both compartments. Contact a qualified service agent at once if an abnormal flame appearance should develop.

Periodically during the heating season, make a visual check of the burner flames. Turn the furnace on at the thermostat. Wait a few minutes, since any dislodged dust will alter the normal flame appearance. Flames should be stable, quiet, soft and blue with slightly orange tips. They should not be yellow. They should extend directly outward from the burner ports without curling downward, floating or lifting off the ports. See Fig.11-1.

⚠ WARNING

Only a qualified contractor, installer or service agency should clean the burners, if the burners get a heavy accumulation of soot and carbon.

14.6 Condensate Trap And Drain System(Qualified Servicer Only)

Annually inspect the drain tubes, drain trap, and field-supplied drain line for proper condensate drainage. Check drain system for hose connection tightness, blockage, and leaks. Clean or repair as necessary.

14.7 Before Leaving An Installation

- Cycle the furnace with the thermostat at least three times.
  Verify cooling and fan only operation.
- Review the Owner's Manual with the homeowner and discuss proper furnace operation and maintenance.
- Leave literature packet near furnace.

14.8 Repair And Replacement Parts

- When ordering any of the listed functional parts, be sure to provide the furnace model, manufacturing, and serial numbers with the order.
- Although only functional parts are shown in the parts list, all sheet metal parts, doors, etc. may be ordered by description.
- Parts are available from your distributor. (See Fig . 14-1)

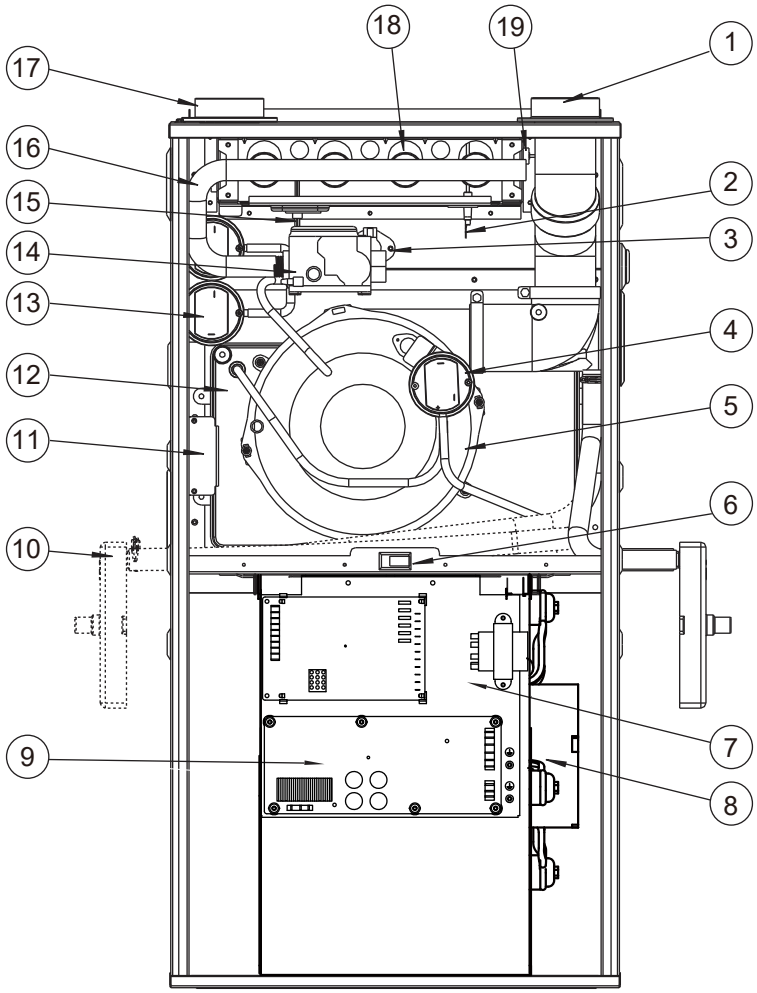

Fig. 14-1 Component Identification

COMPONENT IDENTIFICATION:

1	Outlet Flue Vent	11	Juction Box
2	Flame Sensor	12	Condensate Collector
3	Primary Limit Switch	13	Pressure Switch
4	Condensate Overflow Switch	14	Two-Stage Gas Valve
5	Inducer	15	Hot Surface Ignitor
6	Door Switch	16	Gas Manifold
7	Integrated Contol Module	17	Air Inlet
8	Blower	18	Burner
9	Transformer	19	Rollout Limit Switch
10	Condensate Trap		

Please contact your local installer or dealer for replacement parts.

15 WIRING DIAGRAMS

Wiring is subject to change. Always refer to the wiring diagram on the unit for the most up-to-date schematic.

WARNING

High Voltage:
Disconnecet all power before servicing or installing this unit. Multiple power sources may be present. Failure to do so may cause property damage, personal injury, or death.

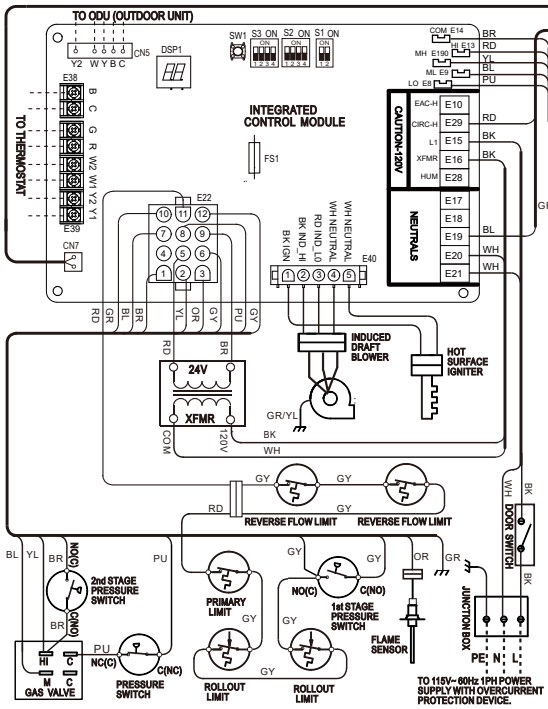

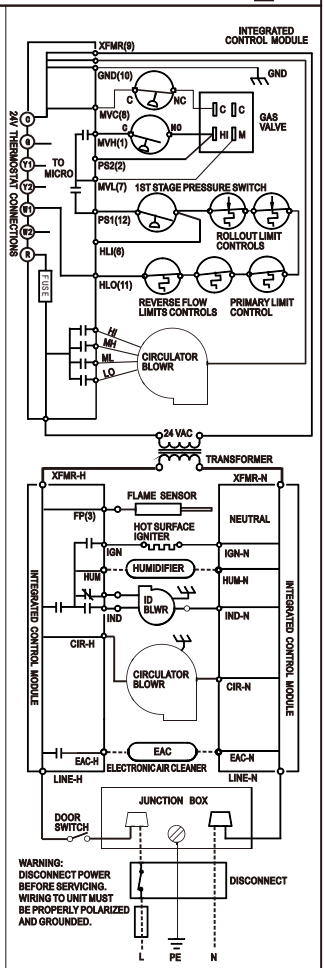

IPM MODULE: * The Factory Default

FAN SPEED		
SW1-1	OFF	NORMAL SPEED *
	ON	SLOW SPEED
SW1-2	OFF	RESERVED *
	ON	WRONG SETTING
SERIES OF PRODUCTS		
SW2-4	OFF	80% GAS FURNACE
	ON	96% GAS FURNACE *

96% MACHINE TYPE

DIP SW			TYPE
SW2-1	SW2-2	SW2-3	
OFF	OFF	OFF	*
OFF	OFF	ON	
OFF	ON	OFF	60B、80B
OFF	ON	ON	80C
ON	OFF	OFF	100C
ON	OFF	ON	100D、120D

LED1 ERROR CODE		CONTENT
STEADY ON		NORMAL OPERATION
OFF		POWER SUPPLY FAILURE
KEEP FLASHING	2s ON 2s OFF	IDLE
	0.2s ON 0.2s OFF	INTER INTEGRATED CIRCUIT COMMUNICATION ERROR
1FLASH/CYCLE		MOTOR CURRENT ERROR
2FLASH/CYCLE		INVERTER MODULE TEMPERATURE ERROR
3FLASH/CYCLE		DC BUS VOLTAGE ERROR
4FLASH/CYCLE		MOTOR PARAMETER ERROR
5FLASH/CYCLE		MOTOR STARTUP FAILURE
6FLASH/CYCLE		PHASE SEQUENCE ERROR

LED2 ERROR CODE	CONTENT
STEADY ON	NORMAL OPERATION
OFF	POWER SUPPLY FAILURE
6FLASH/CYCLE	NO MACHINE TYPE

96% machine windshield setting		FAN SPEED						
		DIP SW			NOMINAL SPEED			
		S3-1	S3-2	S3-3	H-heat	L-heat	H-cool	L-cool
120D		* OFF	ON	OFF	4	3	3	2
100D		* OFF	OFF	ON	4	2	3	2
100C		* OFF	OFF	ON	4	2	3	2
		OFF	OFF	OFF	4	2	2	2
80C		* ON	OFF	OFF	5	3	5	4
		ON	ON	OFF	5	3	4	3
80B		* ON	OFF	OFF	5	3	5	4
		ON	ON	ON	5	3	3	2
		ON	OFF	ON	5	3	5	3
		ON	ON	OFF	5	3	4	3
60B		* OFF	ON	ON	4	3	5	3
		OFF	ON	OFF	4	3	3	2

WARNING: DISCONNECT POWER BEFORE SERVICING. WIRING TO UNIT MUST BE PROPERLY POLARIZED AND GROUNDED.

* The Factory Default

Switch ON Position
See image to the right,switch position is UP for ON.

Switch OFF Position
See image to the right,switch position is DOWN for OFF.

W2 DELAY		
DIP SW		NOMINAL (MINUTES)
S1-1	S1-2	
OFF	OFF	*OFF
ON	OFF	10
OFF	ON	AUTO
ON	ON	20

HEAT OFF DELAY		
DIP SW		NOMINAL (SECONDS)
S2-1	S2-2	
OFF	OFF	*90
ON	OFF	120
OFF	ON	150
ON	ON	180

COOL OFF DELAY		
DIP SW		NOMINAL (SECONDS)
S2-3	S2-4	
OFF	OFF	*60
ON	OFF	90
OFF	ON	120
ON	ON	150

Error code

Error code	Meaning
E1	Shorted pressure
E2	Open pressure 1st-stage
E3	Open pressure 2nd-stage
E4	Open Pressure Switch lock-out
E5	Open thermal limit,Rollout switch
E6	Open thermal limit,Rollout switch (Afer 5 times)
E7	Ignition failure lock-out
E8	Flame loss lock-out
FE	Gas valve relay stuck closed
FL	Flame low
Pr	Power reversed
Fo	Fuse open
bE	Board error
nL	Signal error

Operation code

Operation code	Meaning
--	Idle
H1	1st heat
H2	2nd heat
CF	Continuous fan
C1	1st cooling
C2	2nd cooling
dF	Defrost

SW1 Error Query

After pressing the SW1 key, the digital LED display the last 10 error codes. When the key is pressed once, the digital LED display one error code. The digital LED display the last error code first.

YL YELLOW	GY GRAY
OR ORANGE	RD RED
PU PURPLE	
GR GREEN	
BK BLACK	
BR BROWN	
WH WHITE	
BL BLUE	

JUNCTION
TERMINAL
PLUG CONNECTION
EQUIPMENT GND
FIELD GND
FIELD SPLICE
FIELD INSTALLED

SWITCH (TEMP.)
IGNITER
SWITCH (PRESS.)
OVERCURRENT PROT. DEVICE
KEY
FACTORY OPTIONAL

NOTE:
1. SET HEAT ANTICIPATOR ON ROOM THERMOSTAT AT 0.7 AMPS.
2. MANUFACTURER'S SPECIFIED REPLACEMENT PARTS MUST BE USED WHEN SERVICING.
3. IF ANY OF THE ORIGINAL WIRE AS SUPPLIED WITH THE FURNACE MUST BE REPLACED, IT MUST BE REPLACED WITH WIRING MATERIAL HAVING A TEMPERATURE RATING OF AT LEAST 105°C. USE COPPER CONDUCTORS ONLY.
4. BLOWER SPEEDS SHOULD BE ADJUSTED BY INSTALLER TO MATCH THE INSTALLATION REQUIREMENTS SO AS TO PROVIDE THE CORRECT COOLING CFM. (SEE SPEC SHEET FOR AIR FLOW CHART)
5. UNIT MUST BE PERMANENTLY GROUNDED AND CONFORM TO N. E. C. AND LOCAL CODES.

TwentyThreeC, LLC
800 Beaty Street,
Davidson,NC, 28036
www.oxboxhvac.com

For more information contact
your local dealer (distributor)

Since the manufacturer has a policy of continuous product and product data improvement, it reserves the right to change the design and specification without notice.

ⓒ. 2019 TwentyThreeC, LLC

*** V1.0

此页不做菲林，仅核对使用

印刷技术要求

材质	封面封底内页双胶纸80g
规格	A4规格
颜色	黑白
其他	

设计更改记录表（仅做说明用，不做菲林）

版本升级	更改人	更改日期	更改主要内容	涉及更改页面（印刷页码）
A-B	韦奇	8.22	说明书改版，电控盒图修改	整本
B-B	王心亮	2024.1.18	替换电路图、增加冷媒泄漏报警器说明	整本
B-D	陈佳锋	2024.2.3	替换接线铭牌	P46
D-E	谢铭盛	2024.3.14	接线铭牌勘误修改标识与第44页14.4火焰传感器描述删除“Following cleaning.....6 micro-amps at 115 volts”	P44,P46
E-F	陈佳锋	2024.11.11	接线铭牌修改 部分单词拼写 特殊符号删除等	P46.P33 等涉及全本