INSTALLATION MANUAL

High Efficiency Upflow/Horizontal and
Downflow Gas Furnaces
J801V* Series

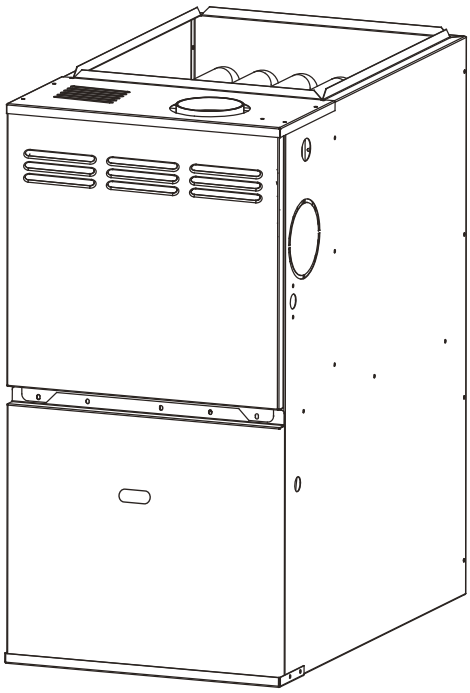

⚠ WARNING

Only qualified personnel should install and service the equipment. The installation, starting up, and servicing of heating, ventilating, and air-conditioning equipment can be hazardous and requires specific knowledge and training. Improperly installed, adjusted or altered equipment by an unqualified person could result in death or serious injury. When working on the equipment, observe all precautions in the literature and on the tags, stickers, and labels that are attached to the equipment.

Before using your unit, please read this manual carefully and keep it for future reference.
The figure shown in this manual is for reference only and may be slightly different from the actual product.

⚠ WARNING

FIRE OR EXPLOSION HAZARD

Failure to follow safety warnings exactly could result in serious injury death or property damage.

Do not store or use gasoline or other flammable vapors and liquids in the vicinity of this or any other appliance..

WHAT TO DO IF YOU SMELL GAS

- Do not try to light any appliance.
- Do not touch any electrical switch; do not use any phone in your building.
- Leave the building immediately.
- Immediately call your gas supplier from a neighbor's phone. Follow the gas supplier's instructions.
- If you cannot reach your gas supplier, call the fire department.

Installation and service must be performed by a qualified installer, service agency or the gas supplier.

NOTE

Do not use this furnace if any part has been under water. A flood-damaged furnace is extremely dangerous. Attempts to use the furnace can result in fire or explosion. A qualified service agency should be contacted to inspect the furnace and to replace all gas controls, control system parts, electrical parts that have been wet or the furnace if deemed necessary.

CONTENTS

1 SAFETY CONSIDERATIONS 01

2 INTRODUCTION 04

3 CODES AND STANDARDS

- 3.1 Safety 05
- 3.2 General Installation 05
- 3.3 Combustion and Ventilation Air 05
- 3.4 Duct Systems 05
- 3.5 Acoustical Lining and Fibrous Glass Duct 05
- 3.6 Gas Piping and Gas Pipe Pressure Testing 05
- 3.7 Electrical Connections 05
- 3.8 Electrical Power Supply 05
- 3.9 Venting 05

4 ELECTROSTATIC DISCHARGE (ESD) PRECAUTIONS PROCEDURE 06

5 LOCATION 06

6 INSTALLATION

- 6.1 Upflow Installation 08
- 6.2 Downflow Installation 08
- 6.3 Horizontal Installation 11
- 6.4 Filter Arrangement 13
- 6.5 Air Ducts 13
- 6.6 Airflow Adjustments 16

7 VENT SYSTEM

- 7.1 Vent Connections 17

- 7.2 Venting 17
- 7.3 Venting Into An Existing Chimney 17
- 7.4 Air For Combustion and Ventilation 17
- 7.5 Air Supply Openings and Ducts 18
- 7.6 Ventilated Combustion Air 19
- 7.7 Vent and Supply (Outside) Air Safety Check Procedure 19

8 GAS SUPPLY AND PIPING

- 8.1 General 20
- 8.2 High Altitude Derate 20
- 8.3 Propane Gas Conversion 21
- 8.4 Gas Piping Connections 22
- 8.5 Gas Piping Checks 23

9 ELECTRICAL CONNECTIONS

- 9.1 115V Wiring 23
- 9.2 Electrical Connection To J-box 24
- 9.3 Power Cord Installation In Furnace J-box 25
- 9.4 Bx Cable Installation In Furnace J-box 25
- 9.5 24V Wiring 25
- 9.6 Accessories (Field Supplied) 25
- 9.7 Grounding 25
- 9.8 R454B Leak Mitigation Kit for use with Furnace and Condensing Units 25

10 START-UP, ADJUSTMENT, AND SAFETY CHECK

- 10.1 General 28
- 10.2 Start-Up Procedures 28
- 10.3 Furnace Start-up 28
- 10.4 Sequence of Operation 29
- 10.5 Gas Manifold Pressure Measurement And Adjustment 30
- 10.6 Gas Input Rate Measurement (Natural Gas Only) 31
- 10.7 Temperature Rise 31
- 10.8 Circulator Blower Speed Adjustment 31

11 OPERATIONAL CHECKS 32

12 SAFETY CIRCUIT DESCRIPTION

- 12.1 General 32
- 12.2 Integrated Control Module 32
- 12.3 Primary Limit 32
- 12.4 Reverse Flow Swith 32
- 12.5 Rollout Limits 32
- 12.6 Pressure Switches 32
- 12.7 Flame Sensor 33

13 TROUBLESHOOTING

- 13.1 Electrostatic Discharge (ESD) Precautions 33
- 13.2 Diagnostic Chart 33
- 13.3 Resetting From Lockout 33

14 SERVICE AND MAINTENANCE PROCEDURES

- 14.1 Annual Inspection 35
- 14.2 Filters 35
- 14.3 Induced Draft and Circulating Blower Motors 35
- 14.4 Flame Sensor (Qualified Servicer Only) 36
- 14.5 Burners 36
- 14.6 Cleaning Heat Exchanger 36
- 14.7 Before Leaving An Installation 37
- 14.8 Repair And Replacement Parts 37

15 WIRING DIAGRAMS 39

Accessories List

No.	Item	Contains	Part Number	Reference Page
1	LP Conversion Kit	LP springs, orifices, and conversion labels	Shipped with unit	Chapter 8.3, Page 21
2	High Altitude Kit	#47 & #48 Natural gas orifices for higher altitudes #56 & #57 Propane gas orifices for higher altitudes	JAYHAKFURN801VA	Chapter 8.2, Page 20

These furnaces comply with requirements embodied in the American National Standard / National Standard of Canada ANSI Z21.47·CSA-2.3 Gas Fired Central Furnaces.

⚠ WARNING

FIRE OR EXPLOSION HAZARD

The furnace is designed and approved for use with Natural Gas and (LP) Propane Gas ONLY. DO NOT BURN ANY LIQUID FUEL OR SOLID FUEL IN THIS FURNACE.
Burning any unapproved fuel will result in damage to the furnace heat exchanger, which could result in Fire, Personal Injury, and/or Property Damage.

⚠ WARNING

Proposition 65: This appliance contains fiberglass insulation.
Respirable particles of fiberglass are known to the state of California to cause cancer. For more information, go to www.P65Warnings.ca.gov.”

1 SAFETY CONSIDERATIONS

⚠ WARNING

FIRE, EXPLOSION, ELECTRICAL SHOCK, AND CARBON MONOXIDE POISONING HAZARD

Failure to follow this warning could result in dangerous operation, serious injury, death, or property damage. Improper installation, adjustment, alteration, service, maintenance, or use could cause carbon monoxide poisoning, explosion, fire, electrical shock, or other conditions which may cause personal injury or property damage. Consult a qualified service agency, local gas supplier, or your distributor or branch for information or assistance. The qualified service agency must use only factory-authorized and listed kits or accessories when modifying this product.

⚠ CAUTION

FURNACE RELIABILITY HAZARD

Improper installation or misapplication of furnace may require excessive servicing or cause premature component failure.
Application of this furnace should be indoors with special attention given to vent sizing and material, gas input rate, air temperature rise, unit leveling, and unit sizing.

CUT HAZARD

Failure to follow this caution may result in personal injury.
Sheet metal parts may have sharp edges or burrs. Use care and wear appropriate protective clothing, safety glasses and gloves when handling parts and servicing furnaces.

Only use this unit in well-ventilated spaces and ensure that there are no obstructions that could impede the airflow into and out of the unit.
Do not use this unit in the following locations:

- Locations with mineral oil.
- Locations with saline atmospheres, such as seaside locations.
- Locations with sulphurous atmospheres, such as near natural hot springs.
- Where high voltage electricity is present, such as in certain industrial locations.
- On vehicles or vessels, such as trucks or ferry boats.
- Where exposure to oily or very humid air may occur, such as kitchens.
- In proximity to sources of electromagnetic radiation, such as high-frequency transmitters or other high strength radiation devices.

Improper installation, adjustment, alteration, service, Maintenance, or use can cause explosion, fire, electrical shock, or other conditions which may cause death, personal injury, or property damage. Consult a qualified installer, service agency, or your distributor or branch for information or assistance. The qualified installer or agency must use factory-authorized kits or accessories when modifying this product. Refer to the individual instructions packaged with the kits or accessories when installing.

Follow all safety codes. Wear safety glasses, protective clothing, and work gloves. Have a fire extinguisher available. Read these instructions thoroughly and follow all warnings or cautions include in literature and attached to the unit. Consult local building codes, the current editions of the National Fuel Gas Code (NFGC) NFPA 54/ANSI Z223.1 and the National Electrical Code (NEC) NFPA 70.

In Canada, refer to the current editions of the National Standards of Canada CAN/CSA-BI49.1 and .2 Natural Gas and Propane Installation Codes, and Canadian Electrical Code CSA C22.1

DANGER identifies the most serious hazards which will result in severe personal injury or death. WARNING signifies hazards which could result in personal injury or death. CAUTION is used to identify unsafe practices which may result in minor personal injury or product and property damage. NOTE is used to highlight suggestions which will result in enhanced Installation, reliability, or operation.

- Use only with type of gas approved for this furnace. Refer to the furnace rating plate.
- Install this furnace only in a location and position as specified in the "Location" section of these instructions.
- Provide adequate combustion and ventilation air to the furnace space as specified in "Air for Combustion and ventilation" section.
- Combustion products must be discharged outdoors. Connect this furnace to an approved vent system only, as specified in the "Venting" section of these instructions.
- Never test for gas leaks with an open flame. Use a commercially available soap solution made specifically for the detection of leaks to check all connections, as specified in the "Gas Suppy and Piping" section.
- Always install furnace to operate within the furnace's intended temperature-rise range with a duct system which has an external static pressure within the allowable range, as specified in the "Start-Up, Adjustments, and Safety Check" section. See furnace rating plate.
- When a furnace is installed so that supply ducts carry air circulated by the furnace to areas outside the space containing the furnace, the return air shall also be handled by duct(s) sealed to the furnace casing and terminating outside the space containing the furnace. See "Air Ducts" section.
- A gas-fired furnace for installation in a residential garage must be installed as specified in the warning box in the "Location" section.
- The furnace may be used for construction heat provided that the furnace installation and operation complies with the first CAUTION in the LOCATION section of these instructions.

- These multipoise Gas-Fired Furnaces are CSA (formerly A.G.A. and C.G.A) design-certified for use with natural and propane gases (see furnace rating plate) and for installation in alcoves, attics, basements, closets, utility rooms, crawlspaces, and garages. The furnace is factory-shipped for use with natural gas. A CSA listed accessory gas conversion kit(provided with unit) is required to convert furnace for use with propane gas.
- The furnaces must be kept free and clear of insulating materials. Inspect surrounding area to ensure insulation material is in safe distance when installing furnaces or adding insulation materials. Insulation materials may be combustible.

  See Section 2 for required clearances to combustible construction.

  Maintain a 1 in. (25 mm) clearance from combustible materials to supply air ductwork for a distance of 36 in. (914 mm) horizontally from the furnace. See NFPA 90B or local code for further requirements.
- These furnaces SHALL NOT be installed directly on carpeting, tile, or any other combustible material other than wood flooring. In downflow installations, factory accessory floor base MUST be used when installed on combustible materials and wood flooring. Special base is not required when this furnace is installed on manufacturer's Coil Assembly.
- See Fig Instruction of lighting/ shutdown operation. Should the gas supply fail to shut off or if overheating occurs, shut off the gas valve to the furnace before shutting of the electrical supply.
- Before heating season begins, examine/check the furnace to determine that:
  a. All flue gas carrying areas external to the furnace (i.e. chimney, vent connector) are clear and free of obstructions.
  b. The vent connector is in place, slopes upward and is physically sound without holes or exccessive corrosion.
  c. The return-air duct connection(s) is physically sound, is sealed to the furnace casing, and terminates outside the space containing the furnace.
  d. The physical support of the furnace is sound without sagging, cracks, gaps, etc around the base so as to provide a seal between the support and the base.
  e. There are no obvious sign of deterioration of the furnace.
  f. The burner flames are in good adjustment (by comparison with pictorial sketches of the main burner flame (see Fig 11-1).
- Furnace operation needs air for combustion and ventilation. Do not block or obstruct air openings on furnace or spacing arroud furnace required for supplying sufficient combustion air and ventilation.

Cover old lighting instructions with this label. Note: Rating plate must be left visible for future reference.

FOR YOUR SAFETY READ BEFORE OPERATING

⚠ WARNING If you do not follow these instructions exactly, a fire or explosion may result causing property damage, personal injury or loss of life.

A. This appliance does not have a pilot. It is equipped with an ignition device which automatically lights the burner. **Do not** try to light the burner by hand.

B. BEFORE OPERATING smell all around the appliance area for gas. Be sure to smell next to the floor because some gas is heavier than air and will settle on the floor.

FOR YOUR SAFETY
"WHAT TO DO IF YOU SMELL GAS"

- Do not try to light any appliance.
- Do not touch any electrical switch; do not use any phone in your building.
- Immediately call your gas supplier from a neighbors phone. Follow the gas suppliers instructions.
- If you cannot reach your gas supplier, call the fire department.

C. Use only your hand to turn the gas control switch. Never use tools. If the switch will not turn by hand, don't try to repair it; call a qualified service technician. Force or attempted repair may result in a fire or explosion.

D. Do not use this appliance if any part has been under water. Immediately call a qualified service technician to inspect the appliance and to replace any part of the control system and any gas control which has been under water.

OPERATING INSTRUCTIONS

1. STOP! Read the safety information above on this label.
2. Set the thermostat to lowest setting.
3. Turn off all electric power to the appliance.
4. This appliance is equipped with an ignition device which automatically lights the burner. Do not try to light the burner by hand.

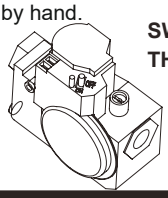

SWITCH SHOWN IN THE "OFF" POSITION

5. Remove control access panel.
6. Wait five (5) minutes to clear out any gas. If you then smell gas, STOP! Follow "B" in the safety information above on this label. If you don't smell gas, go to the next step.
7. Push gas control switch to "ON".

NOTE: Do not force.

8. Replace control access panel.
9. Turn on all electric power to the appliance.
10. Set thermostat to desired setting
11. If the appliance will not operate, follow instructions "To Turn Off Gas To Appliance" and call your service technician or gas supplier.

TO TURN OFF GAS TO APPLIANCE

1. Set the thermostat to lowest setting.
2. Turn off all electric power to the appliance if service is to be performed.
3. Remove control access panel.
4. Push gas control to "OFF". Do not force.
5. Replace control access panel.

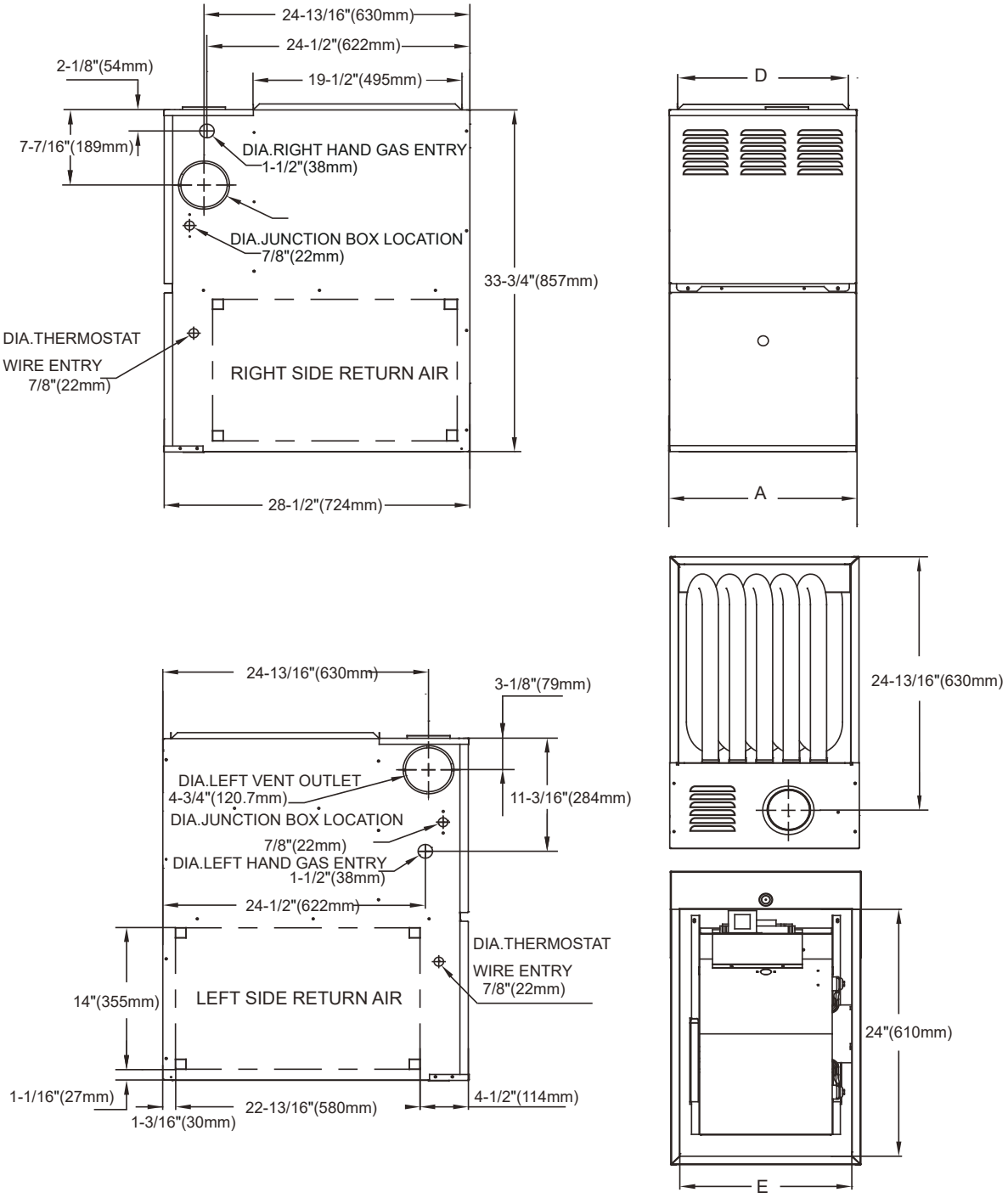

Fig. 1-1 Dimensional Drawing

Table 1-1 Dimensions

FURNACE SIZE	A CABINET WIDTH in (mm)	D SUPPLY AIR WIDTH in(mm)	E RETURN AIR WIDTH in (mm)	SHIP WT (lb)
40AM3	14.5 (368)	13 (330)	12-53/64 (326)	119
60AM3	14.5 (368)	13 (330)	12-53/64 (326)	119
60BM4	17.5 (446)	16 (406)	19-13/32 (493)	126
80BM4	17.5 (446)	16 (406)	19-13/32 (493)	139
80CM4	21 (533)	19.5 (495)	15-27/32 (402)	146
100CM5	21 (533)	19.5 (495)	15-27/32 (402)	159
120DM5	24.5 (622)	23 (584)	22-27/32 (580)	170

2 INTRODUCTION

This series 4-way multipoise Category I fan-assisted furnace is CSA design-certified. A Category I fan-assisted furnace is an appliance equipped with an integral mechanical means to either draw or force products of combustion through the combustion chamber and/or heat exchanger. The furnace is factory-shipped for use with natural gas.

This furnace is not approved for installation in mobile homes, recreational vehicles, or outdoors. This furnace is designed for minimum continuous return-air temperature of 60°F (16°C) db(dry dulb) or intermittent operation down to 55°F (13°C) db such as when used with a night setback thermostat. Return-air temperature must not exceed 85°F (29°C) db. Failure to follow these return-air temperature limits may affect reliability of heat exchangers, motors, and controls. (See Fig. 3-1).

For accessory installation details, refer to the applicable instruction literature.

NOTE

Remove all shipping brackets and materials before operating the furnace.

⚠ WARNING

FIRE, EXPLOSION, ASPHYXIATION HAZARD

Improper adjustment, alteration, service, maintenance, or installation can cause serious injury or death.
Read and follow instructions and precautions in User's Information Manual provided with this furnace. Installation and service must be performed by a qualified service agency or the gas supplier.

⚠ CAUTION

Check entire gas assembly for leaks after lighting this appliance.

INSTALLATION
1.This fumace must be installed in accordance with the manufacturer's instructions and local codes. In the absence of local codes, follow the National Fuel Gas Code ANSI Z223.1/ NFPA54 or CSA B-149. 1 Gas Installation Code.

2.This fumace must be installed so there are provisions for combustion and ventilation air. See manufacturer's installation information provided with this appliance.
Ce foumaise á air chaud doit être installé de manière à ce qu'ilyait ait suffisamment d'air de ventilation et combustion. Consulter les instructions d'installation du fabricant foumies avec cet appareil.

OPERATION
This fumace is equipped with manual reset limit swich(es) in bumer compartment to protect against overheat conditions that can result from inadequate combustion air supply or blocked vent conditions,
1. Do not bypass limit switches.
2. If a limit opens, call a quallified serviceman to correct the condition and reset limit switch.

INSTALLATION

MINIMUM INCHES CLEARANCE TO COMBUSTIBLE CONSTRUCTION

An accessory kit, supplied by the manufacturer, shall be used to convert to propane gas use or may be required for some natural gas applications.

This furnace is for indoor installation in a building constructed on site.

This fumace may be installed on combustible flooring in alcove or closet at minimum clearance as indicated by the diagram from combustible material.

This furnace must be used with a Type B-1 Vent. May be vented with other gas fired appliances.

This fumace is approved for UPFLOW, DOWNFLOW and HORIZONTAL installations.

Clearance arrows do not change with furnace orientation.

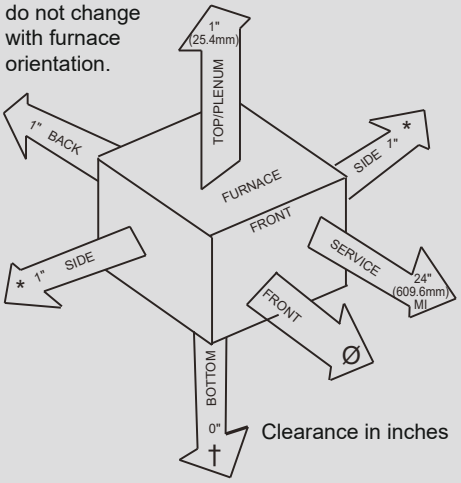

Clearance in inches

Vent Clearance to combustibles:
For Single Wall vents 6 inches (6 po),
For Type B-1 vent type 1 inch (1 po).

MINIMUM INCHES CLEARANCE TO COMBUSTIBLE CONSTRUCTION

DOWNFLOW POSITIONS:

† Installation on non-combustible floors only.

For Installation on combustible flooring only when installed on sub-base provided by installer or manufacturer's.

Ø 18 inches front clearance required for alcove.

HORIZONTAL INSTALLATION IN ATTIC

* Indicates supply or return sides when furnace is in the horizontal position. Line contact only permissible between lines formed by intersections of the Top and two Sides of the furnace jacket, and building joists, studs or framing.

A special base is required (refer to "Horizontal Installation" section in Manual)

3 CODES AND STANDARDS

Follow all national and local codes and standards in addition to these instructions. The installation must comply with regulations of the serving gas supplier, local building, heating, plumbing, and other codes. In absence of local codes, the installation must comply with the national codes listed below and all authorities having jurisdiction. In the United States and Canada, follow all codes and standards for the following:

3.1 Safety

- USA: National Fuel Gas Code (NFGC) NFPA 54-2006/ ANSI Z223.1-2006 and the Installation Standards, Warm Air Heating and Air Conditioning Systems ANSI/NFPA 90B
- CANADA: CSA B149.1-05 National Standard of Canada Natural Gas and Propane Installation Codes (CAN/CSA-B149.1-05)

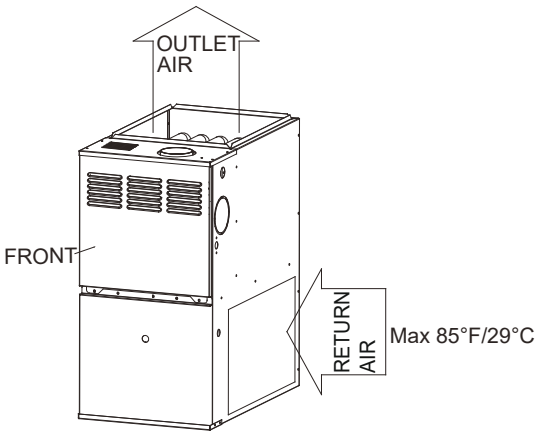

Fig. 3-1 Return Air Temperature

3.2 General Installation

- US: Current edition of the NFGC and the NFPA 90B. For copies, contact the National Fire Protection Association Inc., Batterymarch Park, Quincy, MA 02269; (www.NFPA.org) or for only the NFGC, contact the American Gas Association, 400 N. Capitol Street, N.W., Washington, DC 20001 (www.AGA.org).
- CANADA: CAN/CSA-B149.1-05. For a copy, contact Standard Sales, CSA International, 178 Rexdale Boulevard, Etobicoke (Toronto), Ontario, M9W 1R3 Canada.

3.3 Combustion and Ventilation Air

- US: Section 9.3 of the NFGC, NFPA 54/ANSI Z223.1-2006 Air for Combustion and Ventilation.
- CANADA: Part 8 of CAN/CSA-B149.1-05, Venting Systems and Air Supply for Appliances.

3.4 Duct Systems

- US and CANADA: Air Conditioning Contractors Association (ACCA) Manual D, Sheet Metal and Air Conditioning Contractors National Association (SMACNA), or American Society of Heating, Refrigeration, and Air Conditioning Engineers (ASHRAE) 2001 Fundamentals Handbook Chapter 34 or 2000 HVAC Systems and Equipment Handbook Chapters 9 and 16.

3.5 Acoustical Lining and Fibrous Glass Duct

- US and CANADA: current edition of SMACNA and NFPA 90B as tested by UL Standard 181 for Class I Rigid Air Ducts.

3.6 Gas Piping and Gas Pipe Pressure Testing

- US: NFPA 54/ANSI Z223.1-2006 Chapters 5,6, 7, and 8 and National Plumbing Codes.
- CANADA: CAN/CSA-B149.1-05 Parts 4, 5, and 6 and Appendices A, B, E, and H.

3.7 Electrical Connections

- US: National Electrical Code (NEC) ANSI/NFPA 70-2008.
- CANADA: Canadian Electrical Code CSA C22.I.

3.8 Electrical power supply

Voltage: ANSI C84.1-2006 (104-127 volt)

3.9 Venting

- US: NFGC NFPA 54/ANSI Z223.1-2006 ; chapters 12 and 13.
- CANADA: CAN/CSA-B149.1-05 Part 8 and Appendix C.

4 ELECTROSTATIC DISCHARGE (ESD) PRECAUTIONS PROCEDURE

⚠ CAUTION

FURNACE RELIABILITY HAZARD

Improper installation or service of furnace may cause premature furnace component failure.
Electrostatic discharge can affect electronic components.
Follow the Electrostatic Discharge Precautions Procedure listed below during furnace installation and servicing to protect the furnace electronic control. Precautions will prevent electrostatic discharges from personnel and hand tools which are held during the procedure. These precautions will help to avoid exposing the control to electrostatic discharge by putting the furnace, the control, and the person at the same electrostatic potential.

- Disconnect all power to the furnace. Multiple disconnects may be required. DO NOT TOUCH THE CONTROL OR ANY WIRE CONNECTED TO THE CONTROL PRIOR TO DISCHARGING YOUR BODY'S ELECTROSTATIC CHARGE TO GROUND.
- Firmly touch the clean, unpainted, metal surface of the furnace chassis which is close to the control.Tools held in a person's hand during grounding will be satisfactorily discharged.
- After touching the chassis, you may proceed to service the control or connecting wires as long as you do nothing to recharge your body with static electricity (for example: DO NOT move or shuffle your feet, do not touch ungrounded objects, etc.).
- If you touch ungrounded objects (and recharge your body with static electricity), firmly touch a clean, unpainted metal surface of the furnace again before touching control or wires.
- Use this procedure for installed and uninstalled (ungrounded) furnaces.
- Before removing a new control from its container, discharge your body's electrostatic charge to ground to protect the control from damage. If the control is to be installed in a furnace, follow items 1 through 4 before bringing the control or yourself in contact with the furnace. Put all used and new controls into containers before touching ungrounded objects.
- An ESD service kit (available from commercial sources) may also be used to prevent ESD damage.

5 LOCATION

5.1 General

This multipoise furnace is shipped in packaged configuration. Some assembly and modifications are required when used in any of the four applications . This furnace must:

- Be installed so the electrical components are protected from water.
- Not be installed directly on any combustible material other than wood flooring (refer to SAFETY CONSIDERATIONS).
- Downflow installation and horizontal installation in atttic have additional requirements. See Section 6 Installation.
- Be located as close to the chimney or vent and attached to an air distribution system. Refer to Air Ducts section.
- Be provided ample space for servicing and cleaning. Always comply with minimum fire protection clearances shown on the furnace clearance to combustible label.

The following types of furnace installations may require OUTDOOR AIR for combustion due to chemical exposures:

- Commercial buildings
- Buildings with indoor pools
- Laundry rooms
- Hobby or craft rooms, and
- Chemical storage areas

⚠ WARNING

CARBON MONOXIDE POISONING HAZARD

Failure to follow this warning could result in personal injury or death, and unit component damage.
Corrosive or contaminated air may cause failure of parts containing flue gas, which could leak into the living space. Air for combustion must not be contaminated by halogen compounds, which include fluoride, chloride, bromide, and iodide. These elements can corrode heat exchangers and shorten furnace life. Air contaminants are found in aerosol sprays, detergents, bleaches, cleaning solvents, salts, air fresheners, and other household products. Do not install furnace in a corrosive or contaminated atmosphere. Make sure all combustion and circulating air requirements are met, in addition to all local codes and ordinances.

If air is exposed to the following substances, it should not be used for combustion air, and outdoor air may be required for combustion:

- Permanent wave solutions
- Chlorinated waxes and cleaners
- Chlorine based swimming pool chemicals
- Water softening chemicals
- De-icing salts or chemicals
- Carbon tetrachloride
- Halogen type refrigerants
- Cleaning solvents (such as perchloroethylene)
- Printing inks, paint removers, varnishes, etc.
- Hydrochloric acid
- Cements and glues
- Antistatic fabric softeners for clothes dryers
- Masonry acid washing materials

All fuel-burning equipment must be supplied with air for fuel combustion. Sufficient air must be provided to avoid negative pressure in the equipment room or space. A positive seal must be made between the furnace cabinet and the return-air duct to prevent pulling air from the burner area and from draft safeguard opening. Also see Section 6.4.

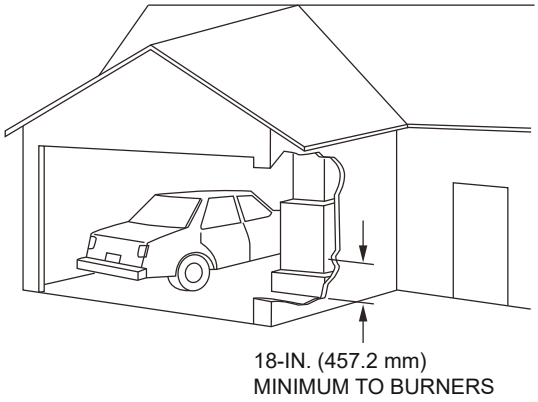

Fig. 5-1 Installation in a Garage

⚠ WARNING

FIRE, INJURY OR DEATH HAZARD

Failure to follow this warning could result in personal injury, death, and/or property damage.
When the furnace is installed in a residential garage, the burners and ignition sources must be located at least 18 inches (457 mm) above the floor. The furnace must be located or protected to avoid damage by vehicles. When the furnace is installed in a public garage, airplane hangar, or other building having a hazardous atmosphere, the furnace must be installed in accordance with the NFGC or CAN/CSA - B149 .1-05. (See Fig. 5-1).

⚠ CAUTION

PERSONAL INJURY AND/OR PROPERTY DAMAGE HAZARD

Improper use or installation of this furnace may cause premature furnace component failure.
This gas furnace may be used for heating buildings under construction provided that:
- The furnace is permanently installed with all electrical wiring, piping, venting and ducting installed according to these installation instructions. A return air duct is provided, sealed to the furnace casing, and terminated outside the space containing the furnace. This prevents a negative pressure condition as created by the circulating air blower, causing a flame rollout and/or drawing combustion products into the structure.
- The furnace is controlled by a thermostat. It may not be "hot wired" to provide heat continuously to the structure without thermostatic control.
-Clean outside air is provided for combustion. This is to minimize the corrosive effects of adhesives, sealers and other construction materials. It also prevents the entrainment of drywall dust into combustion air, which can cause fouling and plugging of furnace components.
- The temperature of the return air to the furnace is maintained between 60°F (16°C) and 85°F (29°C), with no evening setback or shutdown. The use of the furnace while the structure is under construction is deemed to be intermittent operation per our installation instructions.
- The air temperature rise is within the rated rise range on the furnace rating plate, and the gas input rate has been set to the nameplate value.
- The filters used to clean the circulating air during the construction process must be either changed or thoroughly cleaned prior to occupancy.
- The furnace, ductwork and filters are cleaned as necessary to remove drywall dust and construction debris from all HVAC system components after construction is completed.
- Verify proper furnace operating conditions including ignition, gas input rate, air temperature rise, and venting according to these installation instructions.

6 INSTALLATION

⚠ WARNING

FIRE, INJURY OR DEATH HAZARD

Check the power supply before installation. Ensure that the power supply must be reliably grounded following local, state and National Electrical Codes. If not, for example, if the ground wire is detected charged, installation is prohibited before it is rectified. Otherwise, there is a risk of fire and electric shock, causing physical injury or death.

Check the electric wire, water and gas pipeline layout inside the wall, floor and ceiling before installation. Do not implement drilling unless confirm safety with the user, especially for the hidden power wire. An electroprobe can be used to test whether a wire is passing by at the drilling location, to prevent physical injury or death caused by insulation broken cords.

This furnace can be installed for upflow, downflow and horizonal positions (see Fig 6-8~6-14).

6.1 Upflow Installation

Bottom Return Air Inlet

These furnaces are shipped with bottom closure panel installed in bottom return-air opening. Remove and discard this panel when bottom return air is used. To remove bottom closure panel, perform the following:

1.Tilt or raise furnace and remove the screw holding bottom filler panel. (See Fig. 6-1.)

2.Remove bottom closure panel.

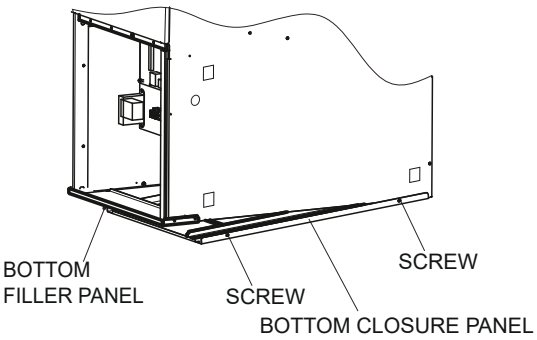

Fig. 6-1 Removing Bottom Closure Panel

Side Return Air Inlet

These furnaces are shipped with bottom closure panel installed in bottom return-air opening. This panel MUST be in place when only side return air is used.

NOTE

Side return-air openings can be used in UPFLOW and most HORIZONTAL configurations. Do not use side return-air openings in DOWNFLOW configuration.

6.2 Downflow Installation

NOTE

For downflow applications, this furnace is approved for use on combustible flooring when anyone of the following 3 accessories are used:

- Special Base
- Cased Coil Assembly
- Coil Box

1. Determine application being installed from Table 6-1.
2. Construct hole in floor per Table 2 and Fig. 6-2.
3. Construct plenum to dimensions specified in Table 6-1 and Fig. 6-2.
4. If down flow subbase is used, install as shown in Fig. 6-3. If Coil Assembly or Coil Box is used, install as shown in Fig. 6-4.

NOTE

It is recommended that the supply-air duct flanges be completely folded over or removed from furnace when installing the furnace on a factory-supplied cased coil or coil box.

To remove the supply-air duct flange, use wide duct pliers or hand seamers to bend flange Be careful of sharp edges.

Bottom Return Air Inlet

Do not use side return openings in downflow configuration.

These furnaces are shipped with bottom closure panel installed in bottom return-air opening. Remove and discard this panel when bottom return air is used. See 6.1 and Fig. 6-1 for bottom closure removal.

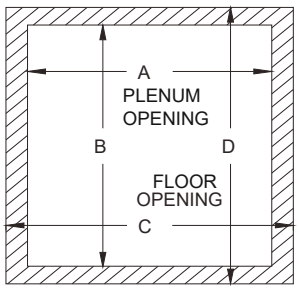

Fig. 6-2 Floor and Plenum Opening Dimensions

Table 6-1 OPENING DIMENSIONS - in (mm)

FURNACE CASING WIDTH	APPLICATION	PLENUM OPENING		FLOOR OPENING	
		A	B	C	D
14-1/2 (368)	Downflow Applications on Noncombustible Flooring	13-3/16 (335)	16-11/16 (424)	13-13/16 (351)	17-21/64 (440)
	Downflow Applications on Combustible Flooring Using special base	12-11/64 (309)	16-1/32 (407)	12-63/64 (330)	16-13/16 (427)
	Downflow Applications on Combustible Flooring with Manufacturer Supplied Coil Assembly or Coil Box	13-3/16 (335)	16-3/16 (411)	13-13/16 (351)	16-13/16 (427)
17-1/2 (445)	Downflow Applications on Noncombustible Flooring	16-3/16 (411)	19-11/16 (500)	16-13/16 (427)	20-5/16 (516)
	Downflow Applications on Combustible Flooring Using special base	15-3/16 (385)	19 (483)	16 (406)	19-3/4 (503)
	Downflow Applications on Combustible Flooring with Manufacturer Supplied Coil Assembly or Coil Box	16-3/16 (411)	19-3/16 (487)	16-13/16 (427)	19-13/16 (503)
21 (553)	Downflow Applications on Noncombustible Flooring	19-11/16 (500)	19-11/16 (500)	20-5/16 (516)	20-5/16 (516)
	Downflow Applications on Combustible Flooring Using special base	18-11/16 (474)	19 (483)	19-1/2 (495)	19-3/4 (503)
	Downflow Applications on Combustible Flooring with Manufacturer Supplied Coil Assembly or Coil Box	19-11/16 (500)	19-3/16 (487)	20-5/16 (516)	19-13/16 (503)
24-1/2 (622)	Downflow Applications on Noncombustible Flooring	23-3/16 (589)	19-11/16 (500)	23-13/16 (605)	20-5/16 (516)
	Downflow Applications on Combustible Flooring Using special base	22-3/16 (563)	19 (483)	23 (584)	19-3/4 (503)
	Downflow Applications on Combustible Flooring with Manufacturer Supplied Coil Assembly or Coil Box	19-11/16 (500)	19-3/16 (487)	20-5/16 (516)	19-13/16 (503)

NOTE: A base for this configuration should be purchased locally

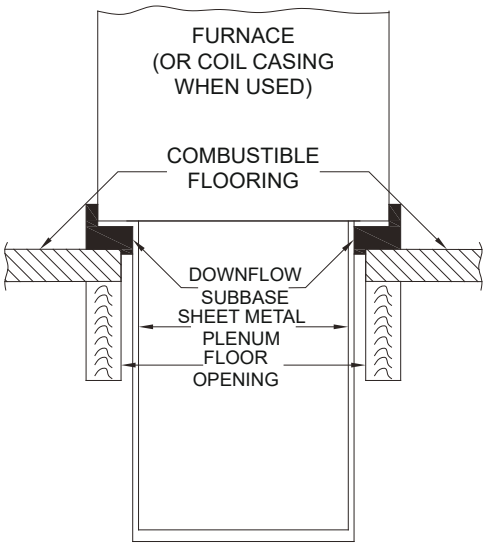

Fig. 6-3 Furnace, Plenum, and Subbase Installed on a Combustible Floor

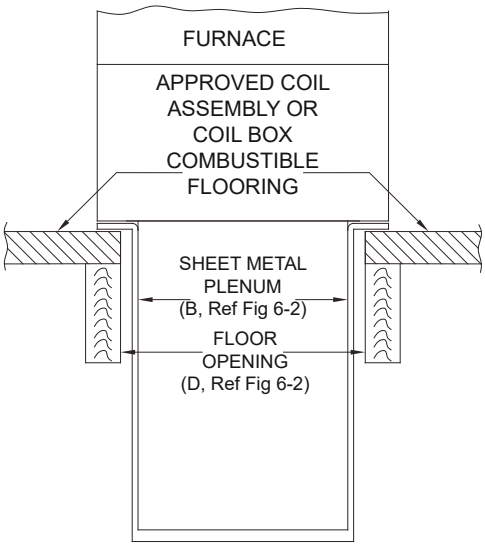

Fig. 6-4 Furnace, Plenum, and Coil Assembly or Coil Box Installed on a Combustible Floor

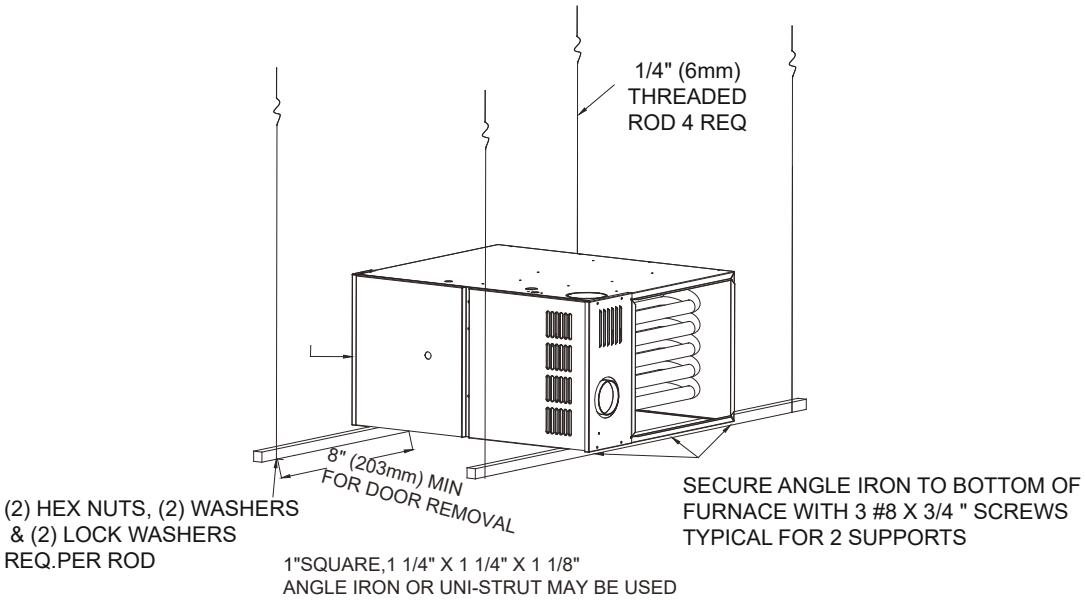

Fig. 6-5 Horizontal Unit Suspension

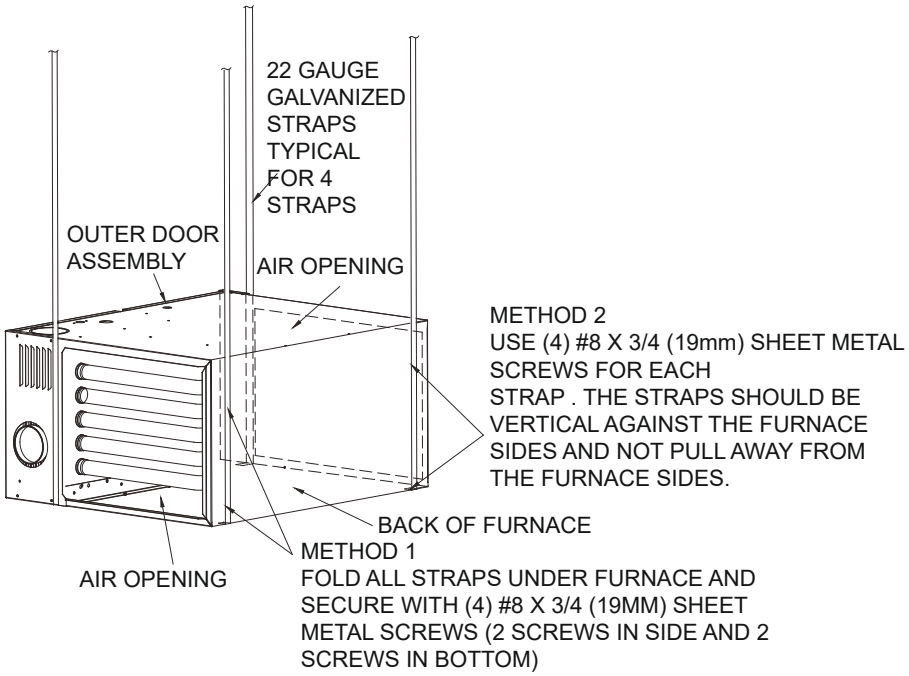

Fig. 6-6 Horizontal Suspension with Straps

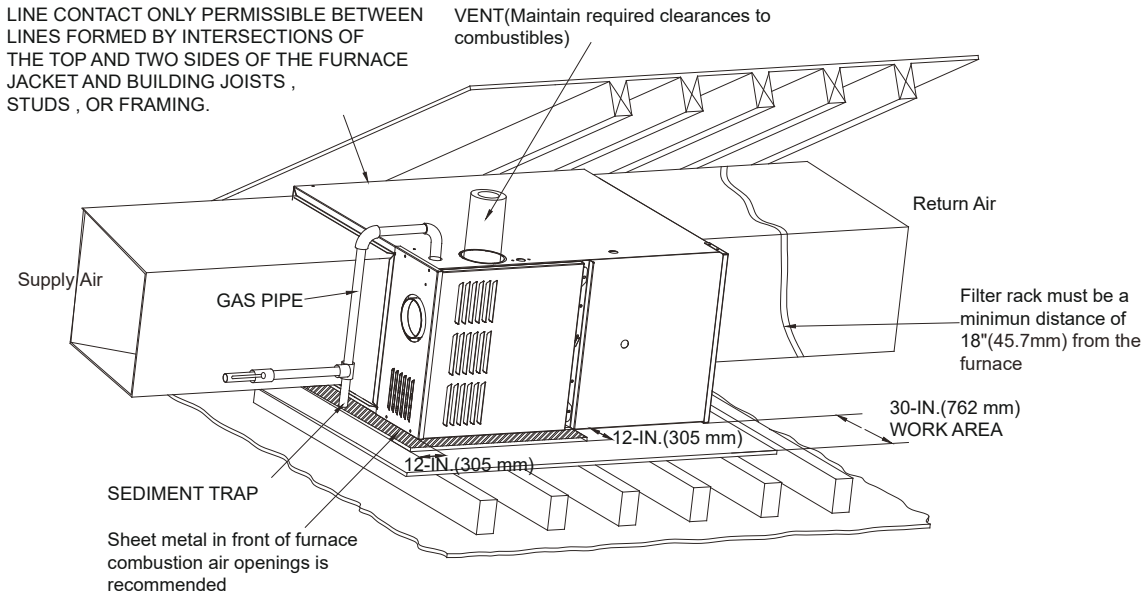

Fig. 6-7 Typical Attic Installation

6.3 Horizontal Installation

⚠ WARNING

FIRE, EXPLOSION, AND CARBON MONOXIDE POISONING HAZARD

Failure to follow this warning could result in personal injury, death, and/or property damage. Do not install the furnace on its back or hang furnace with control compartment facing downward. Safety control operation will be adversely affected. Never connect return-air ducts to the back of the furnace.

The furnace can be installed horizontally in an attic or crawl space on bottom or either the left-hand (LH) or right-hand (RH) side. The furnace can be hung from floor joists, rafters or trusses or installed on a non-combustible platform, blocks, bricks or pad.

Suspended Furnace Support

The furnace may be supported under each end with threaded rod, angle iron or metal plumber's strap as shown. (See Fig. 6-5 and 6-6.)

Secure angle iron to bottom of furnace as shown. Heavy-gauge sheet metal straps (plumber's straps) may be used to suspend the furnace from each bottom corner. To prevent screws from pulling out, use 2 #8 x 3/4-in. screws into the side and 2 #8 x 3/4-in. screws in the bottom of the furnace casing for each strap. (See Fig. 6-5 and 6-6.)

If the screws are attached to ONLY the furnace sides and not the bottom, the straps must be vertical against the furnace sides and not pull away from the furnace sides, so that the strap attachment screws are not In tension (are loaded in shear) for reliable support.

Suspended Furnace Support

Construct working platform at location where all required furnace clearances are met. (See 2 and Fig.6-7.) For furnaces with 1-in. clearance requirement on side, set furnace on noncombustible blocks, bricks or angle iron. For crawl space installations, if the furnace is not suspended from the floor joists, the ground underneath furnace must be level and the furnace set on blocks or bricks.

Recommended Roll-Out Protection

Provide a piece of sheet metal for flame roll-out protection in front of burner area for furnaces closer than 12-in. (305 mm) above the combustible deck or suspended furnaces closer than 12-in. (305 mm) to joists. The sheet metal MUST extend underneath the furnace casing by 1-in. (25 mm) with the door removed. The bottom closure panel on furnaces of widths 12in. (305 mm) and larger may be used for flame roll-out protection when bottom of furnace is used for return air connection. See Fig. 6-7 for proper orientation of roll-out shield.

⚠ WARNING

Pressure Switch Relocation

Relocation of the pressure switch is required for

1) Downflow Left Side Venting Fig. 6-8
2) Horizontal Left Fig. 6-10
3) Upflow Right Side Venting Fig 6-14

To relocate the pressure switch:
Remove wiring and tubing from the pressure switch.
Remove the 2 screws from the mounting bracket.
Relocate the pressure switch to the opposite side of the furnace.
Trim the pressure switch tubing to length and reconnect.
Reconnect the pressure switch wiring.

Vent the furnace with the appropriate connector as shown in Fig. 6-8~6-14.

NOTE

Pressure switch location changes depending on installation, See Figures 6-8 ~ 6-11 for specific location.

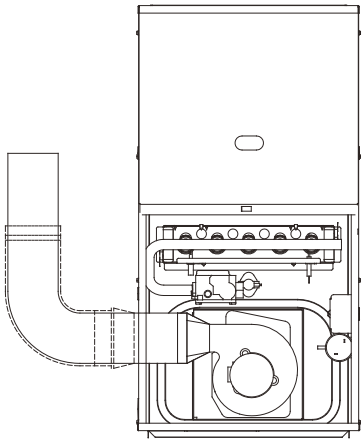

Fig. 6-8 Downflow Application- Vent Elbow Up then Left
Pressure Switch Relocated

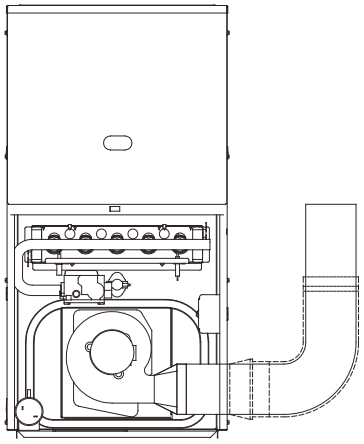

Fig. 6-9 Downflow Application- Vent Elbow Up then Right

WARNING

There is no horizontal application and venting from the top of the unit (vertical exhaust)

Inducer rotation is required for horizontal applications.

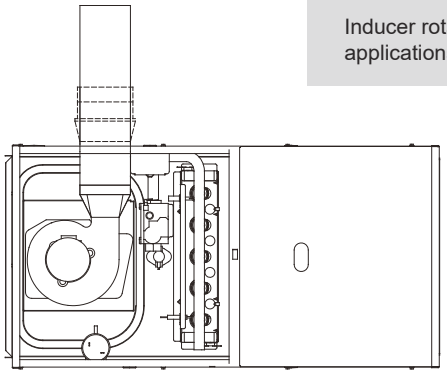

Fig. 6-10 Horizontal Left Application-Vent Elbow Up
Pressure Switch Relocated

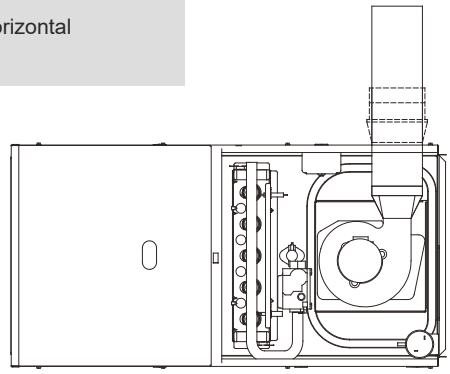

Fig. 6-11 Horizontal Right Application-Vent Elbow Up

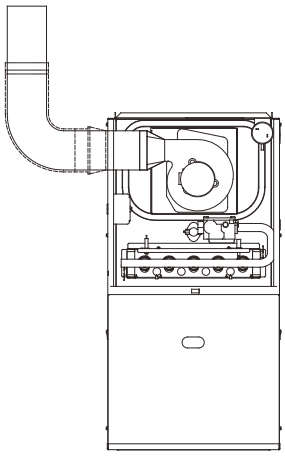

Fig. 6-12 Upflow Application-Vent Elbow Left

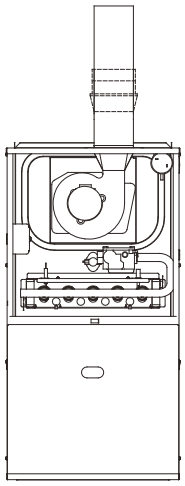

Fig. 6-13 Upflow Application-Vent Elbow Up

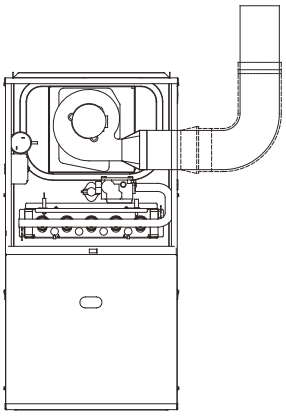

Fig. 6-14 Upflow Application-Vent Elbow Right
Pressure Switch Relocated

6.4 Filter Arrangement

⚠ WARNING

CARBON MONOXIDE AND POISONING HAZARD

Failure to follow this warning could result in personal injury, or death.
Never operate a furnace without a filter or with filter access door removed.

FILTER SIZE

See recommended filter size and type in Table 6-3.
One of the most common causes of a problem in furnace is a blocked or dirty filter. The filter must be inspected monthy for dirt accumulation and replace it if neccessarily.

FILTER TYPE

Air velocity through throwaway filters may not exceed 300 feet per minute (91.4m/min). All velocities over this require the use of high velocity filters. If a normal speed desposable filter is used and air speed exceeds 300 feet per minute (FPM) , two side returns or one side return and the bottom return may be needed. For airflow, refer to Table 6-2.

If using a disposable filter, the air should be directed through the filter by either using a transition duct or employing a V-shaped dual filter within the normal duct size, effectively doubling the original opening.

SIDE RETURN

Locate the 4 cutout locations. These indicate the size of the cut-out to be made in the furnace side panel. Refer to Fig 6-15, "Side Return Cutout Markings".

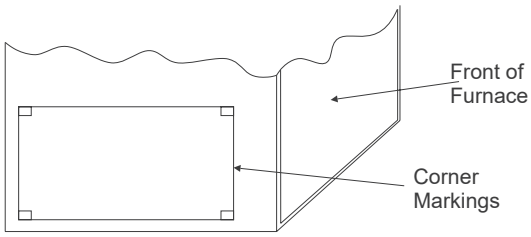

Fig. 6-15 Side Return Cutout Markings

Install the side filter rack following the instructions provided with that accessory. If a filter(s) is provided at another location in the return air system, the ductwork may be directly attached to the furnace side panel.

IMPORTANT: Some accessories such as electronic air cleaners and pleated media may require a larger side opening. Follow the instructions supplied with that accessory for side opening requirements.

Downflow Filters

Downflow furnaces typically are installed with the filters located above the furnace, extending into the return air plenum or duct. Any branch duct (rectangular or round duct) attached to the plenum must attach to the vertical plenum above the filter height.
Filter(s) may be located in the duct system external to the furnace using an external duct filter box attached to the furnace plenum or at the end of the duct in a return filter grille(s). The use of straps and/or supports is required to support the weight of the external filter box.

6.5 Air Ducts

General Requirements

The duct system should be designed and sized according to accepted national standards such as those published by: Air Conditioning
Contractors Association (ACCA), Sheet Metal and Air Conditioning
Contractors National Association (SMACNA) or American Society of Heating, Refrigerating and Air Conditioning Engineers (ASHRAE) or consult The Air Systems Design Guidelines reference tables available from your local distributor. The duct system should be sized to handle the required system design CFM at the design external static pressure. The furnace airflow rates are provided in Table 6-AIR DELIVERY -CFM (Without Filter).
When a furnace is installed so that the supply ducts carry air circulated by the furnace to areas outside the space containing the furnace, the return air shall also be handled by duct(s) sealed to the furnace casing and terminating outside the space containing the furnace.
Secure ductwork with proper fasteners for type of ductwork used.
Seal supply and return-duct connections to furnace with code approved tape or duct sealer.

NOTE

Flexible connections should be used between ductwork and furnace to prevent transmission of vibration. Ductwork passing through unconditioned space should be insulated and sealed to enhance system performance. When air conditioning is used, a vapor barrier is recommended.

Maintain a I-in. (25 mm) clearance from combustible materials to supply air ductwork for a distance of 36 in. (914 mm) horizontally from the furnace. See NFPA 90B or local code for further requirements

Ductwork Acoustical Treatment

NOTE

Metal duct systems that do not have a 90 degree elbow and 10 ft. (3 M) of main duct to the first branch take-off may require internal acoustical lining. As an alternative, fibrous ductwork may be used if constructed and installed in accordance with the latest edition of SMACNA construction standard on fibrous glass ducts. Both acoustical lining and fibrous ductwork shall comply with NFPA 90B as tested by UL Standard 181 for Class 1 Rigid air ducts

Supply Air Connections

For a furnace not equipped with a cooling coil, the outlet duct can be provided with a removable access panel. This opening can be accessible when the furnace is installed and can be of such a size that the heat exchanger can be viewed for possible openings using light assistance or a probe can be inserted for sampling the airstream. The cover attachment shall prevent leaks.

Upflow and Horizontal Furnaces

Connect supply-air duct to flanges on furnace supply-air outlet. Bend flange upward to 90° with wide duct pliers. The supply-air duct must be connected to ONLY the furnace supply-outlet-air duct flanges or air conditioning coil casing (when used). DO NOT cut main furnace casing side to attach supply air duct, humidifier, or other accessories. All accessories MUST be connected to duct external to furnace main casing.

NOTE

For horizontal applications, the top-most flange may be bent past 90 degrees to allow the evaporator coil to hang on the flange temporarily while the remaining attachment and sealing of the coil are performed.

Downflow Furnaces

Connect supply-air duct to supply-air outlet on furnace. Bend flange inward past 90° with wide duct pliers. The supply-air duct must be connected to ONLY the furnace supply outlet or air conditioning coil casing (when used). When installed on combustible material, supply-air duct must be connected to ONLY the accessory subbase or a factory approved air conditioning coil casing. DO NOT cut main furnace casing to attach supply side air duct, humidifier, or other accessories. All accessories MUST be connected to duct external to furnace casing.

Table 6-2 Air Delivery - CFM (Without Filter)

FURNACE SIZE	SPEED	Static Pressure	0	0.2	0.4	0.6	0.8	1
40A	H	[SCFM]	1149	1121	1160	1153	1143	1169
		Temp.Rise °F	26	27	26	26	26	26
	MH	[SCFM]	999	1008	994	1030	990	972
		Temp.Rise °F	30	30	30	29	30	31
	M	[SCFM]	799	777	797	782	828	809
		Temp.Rise °F	37	38	37	38	36	37
	ML	[SCFM]	600	611	622	611	577	632
		Temp.Rise °F	/	/	/	/	/	/
	L	[SCFM]	450	483	460	469	437	454
		Temp.Rise °F	/	/	/	/	/	/
60A	H	[SCFM]	1149	1121	1160	1153	1143	1169
		Temp.Rise °F	39	40	39	39	39	38
	MH	[SCFM]	999	1008	994	1030	990	972
		Temp.Rise °F	45	44	45	43	45	46
	M	[SCFM]	799	777	797	782	828	809
		Temp.Rise °F	/	/	/	/	/	/
	ML	[SCFM]	600	611	622	611	577	632
		Temp.Rise °F	/	/	/	/	/	/
	L	[SCFM]	450	483	460	469	437	454
		Temp.Rise °F	/	/	/	/	/	/
60B	H	[SCFM]	1301	1294	1313	1325	1301	1288
		Temp.Rise °F	34	35	34	34	34	35
	MH	[SCFM]	1101	1106	1103	1106	1077	1142
		Temp.Rise °F	41	40	41	40	42	39
	M	[SCFM]	901	899	889	886	879	918
		Temp.Rise °F	50	50	50	50	51	49
	ML	[SCFM]	800	816	841	783	824	813
		Temp.Rise °F	/	/	/	/	/	/
	L	[SCFM]	600	631	635	612	601	610
		Temp.Rise °F	/	/	/	/	/	/

FURNACE SIZE	SPEED	Static Pressure	0	0.2	0.4	0.6	0.8	1
80B	H	[SCFM]	1301	1294	1313	1325	1301	1288
		Temp.Rise °F	46	46	45	45	46	46
	MH	[SCFM]	1101	1106	1103	1106	1077	1142
		Temp.Rise °F	54	54	54	54	55	52
	M	[SCFM]	901	899	889	886	879	918
		Temp.Rise °F	/	/	/	/	/	/
	ML	[SCFM]	800	816	841	783	824	813
		Temp.Rise °F	/	/	/	/	/	/
	L	[SCFM]	600	631	635	612	601	610
		Temp.Rise °F	/	/	/	/	/	/
80C	H	[SCFM]	1301	1297	1271	1251	1343	1240
		Temp.Rise °F	46	46	47	48	44	48
	MH	[SCFM]	1101	1113	1142	1141	1060	1168
		Temp.Rise °F	54	54	52	52	56	51
	M	[SCFM]	901	855	905	938	874	924
		Temp.Rise °F	/	/	/	/	/	/
	ML	[SCFM]	800	785	815	823	798	863
		Temp.Rise °F	/	/	/	/	/	/
	L	[SCFM]	600	606	593	549	571	549
		Temp.Rise °F	/	/	/	/	/	/
100C	H	[SCFM]	1751	1739	1742	1739	1736	1733
		Temp.Rise °F	43	43	43	43	43	43
	MH	[SCFM]	1501	1516	1492	1500	1499	1505
		Temp.Rise °F	50	49	50	50	50	50
	M	[SCFM]	1351	1351	1364	1356	1347	1336
		Temp.Rise °F	55	55	55	55	55	56
	ML	[SCFM]	1151	1154	1152	1132	1154	1142
		Temp.Rise °F	/	/	/	/	/	/
	L	[SCFM]	1001	995	996	982	981	1013
		Temp.Rise °F	/	/	/	/	/	/
120D	H	[SCFM]	1951	1910	1896	1929	1981	1917
		Temp.Rise °F	38	39	39	39	38	39
	MH	[SCFM]	1751	1775	1749	1772	1786	1771
		Temp.Rise °F	43	42	43	42	42	42
	M	[SCFM]	1501	1570	1575	1569	1543	1544
		Temp.Rise °F	50	48	47	48	48	48
	ML	[SCFM]	1348	1420	1410	1416	1412	1400
		Temp.Rise °F	55	53	53	53	53	53
	L	[SCFM]	1148	1210	1196	1174	1179	1175
		Temp.Rise °F	/	/	/	/	/	/

Table 6-3 Filter Size Information - in (mm)

FURNACE CASING WIDTH	FILTER SIZE		FILTER TYPE
	SIDE RETURN	BOTTOM RETURN	
14-1/2 (368)	16X25 (406X635)	14X25 (356X635)	High Velocity (600 FPM)
17-1/2 (445)	16X25 (406X635)	16X25 (406X635)	
21 (533)	16X25 (406X635)	20X25 (508X635)	
24.5 (622)	16X25 (406X635)	24X25 (610X635)	

6.6 Airflow Adjustments

Table 6-4 Fan Speed Extended Settings

J801V Fan Speed Extended Settings								
J801V Furnaces	Dip Switch				Nominal speed			
	S3-1	S3-2	S3-3	S3-4	H-Heat	L-Heat	H-Cool	L-Cool
40A	1	0	1	1	5	3	5	4
40A	0	0	1	0	4	2	3	2
40A	1	1	0	1	4	2	4	3
60A	1	0	0	1	5	5	5	4
60A	0	1	0	1	4	3	4	3
60B	0	1	1	1	5	4	4	4
60B	0	1	0	1	4	3	4	3
60B	0	1	0	0	4	3	3	2
60B	0	1	1	0	4	3	5	3
80B	1	0	0	1	5	5	5	4
80B	0	1	0	1	4	3	4	3
80B	1	1	1	1	4	3	3	2
80C	1	0	0	1	5	5	5	4
80C	0	1	0	1	4	3	4	3
80C	1	1	1	1	4	3	3	2
100C	0	1	1	1	5	4	4	4
100C	0	1	0	1	4	3	4	3
100C	0	1	0	0	4	3	3	2
100C	0	1	1	0	4	3	5	3
120D	0	1	1	1	5	4	4	4
120D	0	1	0	1	4	3	4	3
120D	0	1	0	0	4	3	3	2
120D	0	1	1	0	4	3	5	3

7 VENT SYSTEM

7.1 Vent Connections

Fig. 7-1.A , “Combustion Air Inducer” shows the furnace as it is shipped from the factory. To convert to a horizontal or downflow position, remove the four screws that secure the inducer assembly and rotate 90 being careful not to damage the gasket. Reinstall screws. Remove cap from appropriate vent outlet location on the cabinet cut insulation in cabinet to same size as the hole provided and reinstall cap in the hole in the top panel.

IMPORTANT: In downflow applications, do not block the combustion air inlet. The furnace must be installed on a coil cabinet or subbase to allow combustion air to enter the burner compartment.

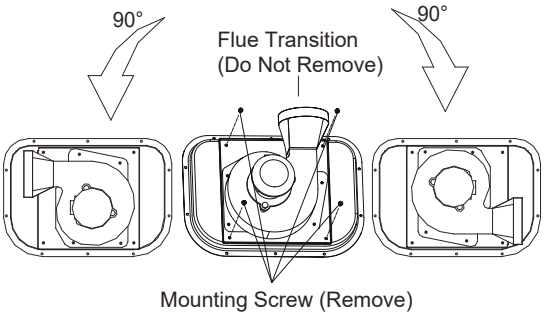

Fig . 7-1.A Combustion Air Inducer

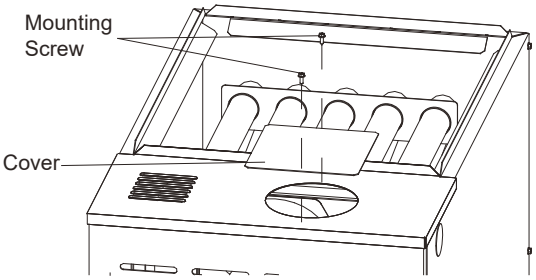

Fig . 7-1.B Cover the hole in the top panel when Combustion Air Inducer is rotated

CATEGORY 1 - 450 F. MAX. VENT TEMP

The venting system must be installed in accordance with Section 5.3 Air for combustion and Ventilation, of the National Fuel Gas Code Z223.1/NFPA 54 (latest edition), or Sections 7.2, 7.3 or 7.4 of CSA B149.1, National Gas and Propane Codes (latest edition) or applicable provisions of the local building code and these instructions.

The furnace shall be connected to a type B vent connector. The furnace shall not be connected to a chimney flue serving a separate appliance designed to burn solid fuel. Single-wall vent pipe is not allowed.

It is recommended that the appliance is installed in a location where the space temperature is 32 °F(0 °C) or higher. If the appliance is installed in a location where the temperature is below 32 °F (0 °C) , the combustion byproducts could condense causing damage to the appliance heat exchanger.

This appliance may be common vented with another gas appliance for residential installations as allowed by the codes and standards listed in these instructions.

7.2 Venting

Category I venting consists of vertically venting one or more appliances in B-vent or B-vent connectors. Type B-vent system extends in a general vertical direction and does not contain offsets exceeding 45° .
A vent system having not more than one 60° offset is permitted.

7.3 Venting Into An Existing Chimney

This furnace may not be connected to any masonry chimney. However, an existing masonry chimney may be used on as a chase through which the metal vent pipe passes.

7.4 Air For Combustion and Ventilation

7.4.1 Ambient Combustion Air Supply

This type installation will draw the air required for combustion from within the space surrounding the appliance and from areas or rooms adjacent to the space surrounding the appliance. This may be from within the space in a non-confined location or it may be brought into the furnace area rom outdoors through permanent openings or ducts.
A single, properly sized pipe from the furnace vent connector to the outdoors must be provided. For upflow models combustion air is brought into the furnace through the unit top panel opening.

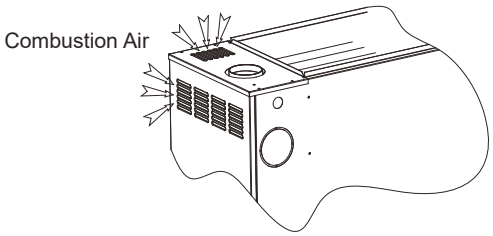

Fig. 7-2 Combustion Airflow Path Through The Furnace Casing to the Burner Box

⚠ WARNING

This type of installation requires that the supply air to the appliance(s) be of a sufficient amount to support all of the appliance(s) in the area. Operation of a mechanical exhaust, such as an exhaust fan, kitchen ventilation system, clothes dryer or fireplace may create conditions requiring special attention to avoid unsatisfactory operation of gas appliances. A venting problem or a lack of supply air will result in a hazardous condition, which can cause the appliance to soot and generate dangerous levels of CARBON MONOXIDE, which can lead to serious injury, property damage and/or death.

An **unconfined space** is not less than 50 cu.ft (1.42m^3) per 1,000Btu/hr (0.2928 kW) input rating for all of the appliances installed in that area.
Rooms communicating directly with the space containing the appliances through openings not furnished with doors, are considered a part of the unconfined space.

In unconfined spaces (see definition below) in buildings, infiltration may be adequate to provide air for combustion ventilation and dilution of flue gases. However, in buildings of tight construction (for example, weather stripping, heavily insulated, caulked, vapor barrier, etc.), additional air may need to be provided using the methods described in “An confined space” section.

An **confined space** is an area with less than 50 cu . ft (1.42m^3) per 1,000 Btu/hr (0.2928 kW) input rating for all of the appliances installed in that area. The following must be considered to obtain proper air for combustion and ventilation in confined spaces.

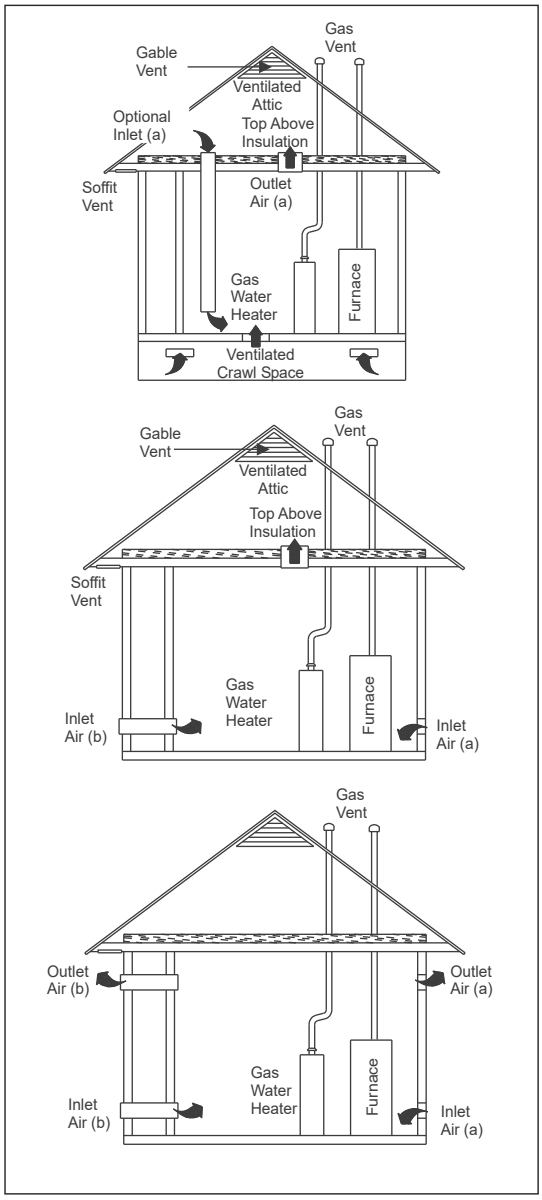

Fig. 7-3 Outside and Ambient Combustion Air

⚠ WARNING

When a Category I furnace is removed or replaced, the original venting system may no longer be correctly sized to properly vent the attached appliances.
An improperly sized vent system can cause CARBON MONOXIDE to spill into the living space causing personal injury, and or death.

Equipment Located in Confined Spaces:

a) All air from inside the building:

The confined space shall be provided with two permanent openings communicating directly with an additional room(s) of sufficient volume so that the combined volume of all spaces meets the criteria. The total input of all gas utilization equipment installed in the combined space shall be considered in making this determination. Each opening shall have a minimum free area of 1 square inch per 1,000 Btu per hour of the total input rating of all gas utilization equipment in the confined space. One opening shall be within 12 inches of the top and one within 12 inches of the bottom of the enclosure (See Table 7-1).

Table 7-1 Minimum Area in Square Inch Required for Each Opening

Btu/h Input Rating	Minimum Free Area in Square Inch Required for Each Opening
40,000	40 in^2 (322 cm^2)
60,000	60 in^2 (450 cm^2)
80,000	80 in^2 (516 cm^2)
100,000	100 in^2 (645 cm^2)
120,000	120 in^2 (742 cm^2)

b) All air from outdoors:

Table 7-2 Minimum Free Area Required for Each Opening

Btu/h Input Rating	Minimum Free Area Required for Each Opening		
	Horizontal Duct (2,000 Btu/h)	Vertical Duct or Opening to Outside (4,000 Btu/h)	Round Duct (4,000 Btu/h)
40,000	20 in^2 (129 cm^2)	10 in^2 (65 cm^2)	4″ (10 cm)
60,000	30 in^2 (226 cm^2)	15 in^2 (96.8 cm^2)	5″ (13 cm)
80,000	40 in^2 (258 cm^2)	20 in^2 (129 cm^2)	5″ (13 cm)
100,000	50 in^2 (323 cm^2)	25 in^2 (161 cm^2)	6″ (15 cm)
120,000	60 in^2 (387 cm^2)	30 in^2 (194 cm^2)	7″ (18 cm)

EXAMPLE: Determining Free Area.

Appliance 1 Appliance 2 Total Input
100,000 + 30,000 = (130,000 ÷ 4,000) = 32.5 Sq. In. Vertical

Appliance 1 Appliance 2 Total Input
100,000 + 30,000 = (130,000 ÷ 2,000) = 65 Sq. In. Horizontal

7.5 Air Supply Openings and Ducts

1. Two permanent openings, one within 12 in (305 mm) of the top and one within 12 in (305 mm) of bottom of the confined space, Two permanent openings, shall communicate directly or by means of ducts with the outdoors, crawl spaces or attic spaces.
2. One permanent openings, commencing within 12 in (305 mm) of the top of the enclosure shall be permitted where the equipment has clearances of at least 1 in (25.4 mm) from the sides and back and 6 in (152.4 mm) from the front of the appliance. The opening shall communicate directly with the outdoors and shall have a minimum free area of:
   a. 1 square in per 3000 Btu per hour (734 mm2/kW) of the total input rating of all equipment located in the enclosure.
   b. Not less than the sum of all vent connectors in the confined space.

3. The duct shall be least the same cross-sectional area as the free area of the air supply inlet opening to which it connects.
4. The blocking effects of louvers, grilles and screens must be given consideration in calculating free area. If the free area of a specific louver aor grille is not known. Refer to Table ,“Estimated Free Area” to estimated free area.

Table 7-3 Estimated Free Area

Wood or Metal Louvers or Grilles	Wood 20-25% Metal 60-70%
Screens +	1/4" (0.635cm) mesh or larger 100%

5. An opening may be used in lieu of a duct to provide to provide the outside air supply to an appliance unless otherwise permitted by the authority having jurisdiction. The opening shall be located within 12" (30.5 cm) horizontally from the burner level of the appliance. Refer to “COMBUSTION AIR SOURCE FROM OUTDOORS and VENT AND SUPPLY AIR SAFETY CHECK” in these instructions for additional information and safety check procedure.

7.6 Ventilated Combustion Air

The ventilated attic space or a crawl space from which the combustion air is taken must comply with the requirements specified in “**Combustion Air Source from Outdoors**” in this instruction or in Section 7.4, Air for Combustion and Ventilation of the National Fuel Gas Code, ANSI Z223.1 (latest edition). This type installation requires two properly sized pipes. One brings combustion air from a properly ventilated attic space or crawl space and a second pipe that extends from the furnace vent connection (top right of unit) to the exterior of the building.

7.7 Vent and Supply (Outside) Air Safety Check Procedure

For Category I furnaces, vent installations shall be in accordance with Parts 7 and 11 of the National Fuel Gas Code, ANSI Z223.1/NFPA 54 and or Section 7 and Appendix B of the CAS B 149.1, Natural Gas and Propane Installation Codes, the local building codes, furnace and vent manufacturer's instructions.
Multi-story or common venting systems are permitted and must be installed in accordance with the National Fuel Gas Code, ANSI Z223.1/NFPA 54 and / or the CSA B 149.1, Natural Gas and Propane Installation Codes, and the manufacturer's instructions.
Vent connectors serving Category I furnaces shall not be connected into any portion of mechanical draft systems operating under positive pressure.

Horizontal portions of the venting system shall be supported to prevent sagging using hangers or perforated straps and must slope upwards not less than 1/4" per foot (0.635 cm/m) from the furnace to the vent terminal.
It is recommended that you follow the venting safety procedure below. This procedure is designed to detect an inadequate ventilation system that can cause the appliances in the area to operate improperly causing unsafe levels of Carbon Monoxide or an unsafe condition to occur.

⚠ WARNING

CARBON MONOXIDE POISONING HAZARD

Failure to follow the steps outlined below for each appliance connected to the venting system being placed into operation could result in carbon-monoxide poisoning or death. The following steps shall be followed for each appliance connected to the venting system being placed into operation, while all other appliances connected to the venting system are not in operation:

1. Inspect the venting system for proper size and horizontal pitch. Determine that there is no blockage, restriction, leakage, corrosion or other deficiencies, which could cause an unsafe condition
2. Close all building doors and windows and all doors.
3. Turn on clothes dryers and TURN ON any exhaust fans, such as range hoods and bathroom exhausts, so they shall operate at maximum speed. Open the fireplace damper. Do not operate a summer exhaust fan.
4. Follow the lighting instructions. Place the appliance being inspected in operation. Adjust thermostat so the appliance shall operate continuously.
5. Test each appliance (such as a water heater) equipped with a draft hood for spillage (down-draft or no draft) at the draft hood relief opening after 5 minutes of main burner operation. Appliances that do not have draft hoods need to be checked at the vent pipe as close to the appliance as possible. Use a combustion analyzer to check the CO2 and CO levels of each appliance. Use a draft gauge to check for a downdraft or inadequate draft condition.
6. After it has been determined that each appliance properly vents when tested as outlined above, return doors, windows, exhaust fans, fireplace dampers and any other gas burning appliance to their normal condition.
7. If improper venting is observed during any of the above tests, a problem exists with either the venting system or the appliance does not have enough combustion air (Supply Air from outside) to complete combustion. This condition must be corrected before the appliance can function safely.

   NOTE: An unsafe condition exists when the CO reading exceeds 40 ppm and the draft reading is not in excess of -0.1 in. W.W.(-25 kPa) with all of the appliance(s) operating at the same time.
8. Any corrections to the venting system and / or to the supply (outside) air system must be in accordance with the National Fuel Gas Code Z223.1 or CAN/CGA B149.1 Natural Gas and Propane Installation Code (latest editions). If the vent system must be resized, follow the appropriate tables in Appendix G of the above codes or for this appliance.

8 GAS SUPPLY AND PIPING

⚠ WARNING

FIRE OR EXPLOSION HAZARD

Failure to follow this warning could result in personal injury, death, and/or property damage. Never purge a gas line into a combustion chamber. Never test for gas leaks with an open flame. Use a commercially available soap solution made specifically for the detection of leaks to check all connections.

⚠ WARNING

FIRE OR EXPLOSION HAZARD

Failure to follow this warning could result in personal injury, death, and/or property damage. Use proper length of pipe to avoid stress on gas control manifold and a gas leak.

⚠ CAUTION

FURNACE OVERHEAT HAZARD

Failure to follow this caution may result in property damage.
Connect gas pipe to gas valve using a backup wrench to avoid damaging gas controls and burner misalignment.

⚠ WARNING

FIRE OR EXPLOSION HAZARD

Failure to follow this warning could result in personal injury, death, and/or property damage. If local codes allow the use of a flexible gas appliance connector, always use a new listed connector. Do not use a connector which has previously served another gas appliance.
Black iron pipe shall be installed at the furnace gas control valve and extend a minimum of 2 in. (51 mm) outside the cabinet.

8.1 General

The furnace rating plate includes the approved furnace gas input rating and gas types. The furnace must be equipped to operate on the type of gas applied. This includes any conversion kits required for alternate fuels and/or high altitude.

Inlet gas supply pressures must be maintained within the ranges specified in Table 8. The supply pressure must be constant and available with all other household gas fired appliances operating. The minimum gas supply pressure must be maintained to prevent unreliable ignition. The maximum must not be exceeded to prevent unit overfiring.

Table 8-1 Inlet Gas Supply Pressure

Inlet Gas Supply Pressure		
Natural Gas	Minimum:5.0" W.C.	Maximum:10.5" W.C.
Propane Gas	Minimum:11.0" W.C.	Maximum:13.0" W.C.

NOTE

Adjusting the minimum supply pressure below the limits in the above table could lead to unreliable ignition. Gas input to the burners must not exceed the rated input shown on the rating plate. Overfiring of the furnace can result in premature heat exchanger failure. Gas pressures in excess of 13 inches water column can also cause permanent damage to the gas valve.

At all altitudes and with either fuel, the air temperature rise must be within the range listed on the furnace nameplate. Should this appliance be converted to LP, refer to the instructions included in the factory authorized LP conversion kit.

8.2 High Altitude Derate

Alternately standard derate for altitude from National Fuel Gas Code ANSI Z223.1 of 4% per 1000' may be taken. Refer to the most recent version of ASNI Z223.1 for correct gas orifice. The orifices must be selected using the table below. The furnace derate is 4% for each 1,000 feet above sea level. This table is based upon a heating value of approximately 1,000 Btu/ft^3.

In Canada, the input rating must be derated by 10 percent for altitudes of 2,000 ft. (610m) to 4,500 feet (1370m) above sea level by an authorized Gas Conversion Station or Dealer.

When an appliance is installed at elevations above 4500 ft (1350 m), the certified high-altitude input rating shall be reduces at the rate of 4% for each additional 1000 ft (300 m).

In some areas the gas supplier may artificially derate the gas in an effort to compensate for the effects of altitude. If the gas is artificially derated, the appropriate orifice size must be determined based upon the Btu/ft^3 content of the derated gas and the altitude. Refer to the latest version of NFPA54/ANSI Z223.1 for US and the latest version of CSA B149.1 for Canada., and information provided by the gas supplier to determine the proper orifice size.

Table 8-2 High Altitude Derate Orifice Size Chart (Natural and LP Gas*)

US Installation

Input Rate kBtu/h	Number of Burner	Elevation(ft)									
		0-2000		2000-4000		4000-6000		6000-8000		8000-10000	
		Nat	LP	Nat	LP	Nat	LP	Nat	LP	Nat	LP
40A	3	50	59	51	61	52	62	53	64	54	65
60A	3	45	55	47	56	48	56	49	57	51	57
60B	3	45	55	47	56	48	56	49	57	51	57
80B	5	49	56	50	57	51	58	52	59	53	61
80C	5	49	56	50	57	51	58	52	59	53	61
100C	6	49	56	50	57	51	58	52	59	53	61
120D	7	49	56	50	57	51	58	52	59	53	61

*LP orifice based on 10 inWC manifold pressure
The input to the furnace must be checked AFTER reorificing.

Table 8-3 High Altitude Derate Orifice Size Chart (Natural and LP Gas*)

Canada Installation

Input Rate hBtu/h	Number of Burner	Elevation(ft)									
		0-2000		2000-4000		4000-6000		6000-8000		8000-10000	
		Nat	LP	Nat	LP	Nat	LP	Nat	LP	Nat	LP
40A	3	50	59	51	61	52	62	53	64	54	65
60A	3	45	55	47	56	48	56	49	57	51	57
60B	3	45	55	47	56	48	56	49	57	51	57
80B	5	49	56	50	57	51	58	52	59	53	61
80C	5	49	56	50	57	51	58	52	59	53	61
100C	6	49	56	50	57	51	58	52	59	53	61
120D	7	49	56	50	57	51	58	52	59	53	61

*LP orifice based on 10 inWC manifold pressure
The input to the furnace must be checked AFTER reorificing.

8.3 Propane Gas Conversion

Possible property damage, personal injury or death may occur if the correct conversion kits are not installed. the appropriate kits must be applied to insure safe and proper furnace operation. all conversions must be performed by a qualified installer or service agency.

This unit is configured for natural gas. The appropriate manufacturer's propane gas conversion kit (Shipped with unit) must be applied for propane gas installations. High Altitude Installations refer to the "High Altitude Derate" section for details.

Contact your distributor for a tabular listing of appropriate manufacturer's kits for propane gas and/or high altitude installations. The indicated kits must be used to insure safe and proper furnace operation. All conversions must be performed by a qualified installer, or service agency.

The gas supply shall be shut off prior to disconnecting the electrical power before proceeding with conversion.

1.Make sure all utilities (gas and electricity) are turned off
2.Remove the furnace front panel
3.Disconnect the gas line from the gas valve
4.Disconnect the wires at gas control.

This conversion kit is only applicable to J801V. The J801V is a single stage furnace utilizing the two stage gas valve, the factory connection of Lo and Hi Fire tied together allows the J801V to run only in High Fire for Single Stage operation.

To Replace Orifices with LP Orifices From Gas Manifold:

See Fig.8-1

1.Disconnect all control wires
2.Remove 4 screws holding gas manifold to supporting burner assembly bracket
3.Slide the manifold (with valve and orifices) out of burners. Be careful not to damage the assembly.
4.Replace the natural gas orifices with the LP orifices or appropriate high altitude orifices (refer to Section High Altitude Installation)
5.Re-assemble the gas manifold and re-connect all wires.

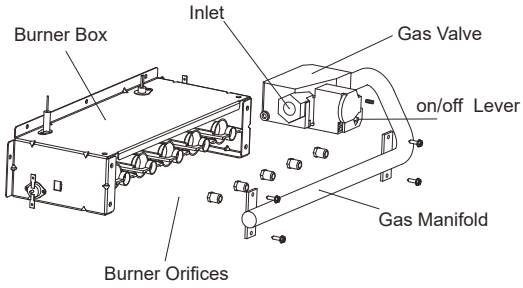

Fig.8-1

To Convert From Natural to LP Gas on Gas Valve

1.Remove regulator (gas valve) cover screw
2.Remove regulator adjustment screw (beneath the cover screw)
3.Remove natural gas spring from regulator sleeve.
4.Insert the LP spring included in the conversion kit into sleeve
5.Replace the adjustment screw and adjust the outlet pressure to manufacturer's specified outlet pressure (Refer to Fig 10-1 and Section 10.5 and 10.6 for outlet pressure tap location and pressure measurement)
6.Replace the regulator cover screw
7.Attach the WARNING label (provided in the kit) to the gas valve, attach small round LP label to the top of regulator cover screw.
8.Fill required blanks in provided conversion label and attach it to appropriate location on furnace case.

8.4 Gas Piping Connections

To avoid possible unsatisfactory operation or equipment damage due to underfiring of equipment, use the proper size of natural gas piping needed when running pipe from the meter/tank to the furnace.

When sizing a trunk line, be sure to include all appliances which will operate simultaneously. (See Table 8-4)

The gas piping supplying the furnace must be properly sized based on the gas flow required, specific gravity of the gas, and length of the run. The gas line installation must comply with local codes, or in their absence, refer to the latest version of NFPA54/ANSI Z223.1 for US and the latest version of CSA B149.1 for Canada.

Table 8-4 Natural Gas Capacity of Pipe In Cubic Feet of Gas Per Hour (CFH)

Nominal iron pipe size in(mm)	Internal DIA. in(mm)	Length of pipe-ft(m)				
		10 (3.0)	20 (6.0)	30 (9.1)	40 (12.1)	50 (15.2)
1/2 (12.7)	0.622(15.8)	175	120	97	82	73
3/4 (19.0)	0.824(20.9)	360	250	200	170	151
1 (25.4)	1.049(26.6)	680	465	375	320	285
1-1/4 (31.8)	1.380(35.0)	1400	950	770	660	580
1-1/2 (38.1)	1.610(40.9)	2100	1460	1180	990	900

(Pressure 0.5 psig or less and pressure drop of 0.3" W.C.; Based on 0.60 Specific Gravity Gas)

$$CFH = \frac{\text{Btu/h Furnace input}}{\text{Heating Value of Gas (Btu/Cubic Foot)}}$$

To connect the furnace to the building's gas piping, the installer must supply a ground joint union, drip leg, manual shutoff valve, and line and fittings to connect to gas valve. In some cases, the installer may also need to supply a transition piece from 1/2" pipe to a larger pipe size.

The following stipulations apply when connecting gas piping.

- Use black iron or steel pipe and fittings for the building piping.
- Use pipe joint compound on male threads only. Pipe joint compound must be resistant to the action of the fuel used.
- Use ground joint unions
- Install a drip leg to trap dirt and moisture before it can enter the gas valve. The drip leg must be a minimum of three inches long.
- Install a 1/8" NPT pipe plug fitting, accessible for test gage connection, immediately upstream of the gas supply connection to the furnace.
- Use two pipe wrenches when making connection to the gas valve to keep it from turning. The orientation of the gas valve on the manifold must be maintained as shipped from the factory.
- Install a manual shutoff valve between the gas meter and unit within six feet of the unit. If a union is installed, the union must be downstream of the manual shutoff valve, between the shutoff valve and the furnace.
- Tighten all joints securely.
- Connect the furnace to the building piping by one of the following
  methods:
  Rigid metallic pipe and fittings

  Semi-rigid metallic tubing and metallic fittings. Aluminum alloy tubing must not be used in exterior locations.

  Use listed gas appliance connectors in accordance with their instructions. Connectors must be fully in the same room as the furnace.

  Protect connectors and semi-rigid tubing against physical and thermal damage when installed. Ensure aluminum-alloy tubing and connectors are coated to protect against external corrosion when in contact with masonry, plaster, or insulation, or subjected to repeated wetting by liquids such as water (except rain water), detergents, or sewage.

When the gas piping enters through the right side of the furnace, the installer must supply the following fittings (starting from the gas valve):

- 90 degree elbows (2).
- Close nipple.
- Straight pipe to reach the exterior of the furnace.

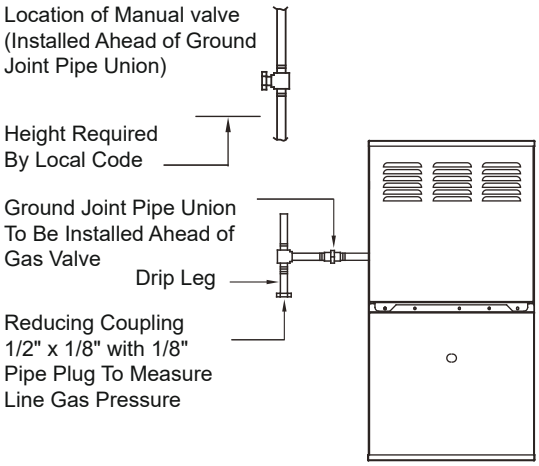

Fig. 8-2 Typical Gas Pipe Arrangement

A ground joint union, drip leg, and manual shutoff valve must also be supplied by the installer. In some cases, the installer may also need to supply a transition piece from 1/2" to another pipe size.

When the gas piping enters through the left side of the furnace, the installer must supply the following fittings (starting from the gas valve):
• Straight pipe to reach the exterior of the furnace.
• A ground joint union, drip leg, and manual shutoff valve must also be supplied by the installer. In some cases, the installer may also need to supply a transition piece from 1/2 inch to another pipe size.

8.5 Gas Piping Checks

Before placing unit in operation, leak test the unit and gas connections.

⚠ WARNING

FIRE AND EXPLOSION HAZARD

Failure to follow this warning could cause personal injury, death and/or property damage.
Never test for gas leaks with an open flame. Use a commercially available soap solution made specifically for the detection of leaks to check all connections.

Check for leaks using an approved chloride-free soap and water solution, an electronic combustible gas detector, or other approved testing methods.

NOTE

Never exceed specified pressures for testing. Higher pressure may damage the gas valve and cause subsequent overfiring, resulting in heat exchanger failure.

Disconnect this unit and shutoff valve from the gas supply piping system before pressure testing the supply piping system with pressures in excess of 1/2 psig (3.48 kPa).

This unit must be isolated from the gas supply system by closing its manual shutoff valve before pressure testing of gas supply piping system with test pressures equal to or less than 1/2 psig (3.48 kPa).

9 ELECTRICAL CONNECTIONS

⚠ WARNING

ELECTRICAL SHOCK HAZARD

Failure to follow this warning could result in personal injury or death.
Blower access panel door switch opens 115V power to control.
No component operation can occur. Do not bypass or close switch with panel removed.

See Fig. 9-3 for field wiring diagram showing typical field 115V wiring.
Check all factory and field electrical connections for tightness.
Field-supplied wiring shall conform with the limitations of 95°F (35°C) rise.

⚠ WARNING

ELECTRICAL SHOCK AND FIRE HAZARD

Failure to follow this warning could result in personal injury, death, or property damage.
The cabinet MUST have an uninterrupted or unbroken ground according to NEC ANSI/NFPA 70-2008 and Canadian Electrical Code CSA C22.1 or local codes to minimize personal injury if an electrical fault should occur.
This may consist of electrical wire, conduit approved for electrical ground or a listed, grounded power cord (where permitted by local code) when installed in accordance with existing electrical codes. Refer to the power cord manufacturer's ratings for proper wire gauge. Do not use gas piping as an electrical ground.

⚠ CAUTION

FURNACE MAY NOT OPERATE

Failure to follow this caution may result in intermittent furnace operation.
Furnace control must be grounded for proper operation or else control will lock out. Control must remain grounded through green/yellow wire routed to gas valve and manifold bracket screw.

9.1 115V Wiring

Verify that the voltage, frequency, and phase correspond to that specified on unit rating plate. Also, check to be sure that service provided by utility is sufficient to handle load imposed by this equipment. Refer to rating plate or Table 8 for equipment electrical specifications.

U.S. installations: Make all electrical connections in accordance with National Electrical Code (NEC) ANSI/NFPA 70-2008 and any local codes or ordinances that might apply. Canadian installations: Make all electrical connections in accordance with Canadian Electrical Code CSA C22.1 or authorities having jurisdiction.

⚠ WARNING

FIRE HAZARD

Failure to follow this warning could result in personal injury, death, or property damage.
Do not connect aluminum wire between disconnect switch and furnace. Use only copper wire.

Use a separate, fused branch electrical circuit with a properly sized fuse or circuit breaker for this furnace. See Table 12 for wire size and fuse specifications. A readily accessible means of electrical disconnect must be located within sight of the furnace.

NOTE

Proper polarity must be maintained for 115V wiring. If polarity is incorrect, control LED status indicator light will flash rapidly and furnace will NOT operate.

JUNCTION BOX RELOCATION

NOTE

If factory location of J-Box is acceptable, go to next section (ELECTRICAL CONNECTION TO J-BOX)

On 14" wide casing models, the J-Box shall not be relocated to other side of furnace casing when the vent pipe is routed within the casing.

1. Remove and save two screws holding J-Box. (See Fig. 9-1.)

NOTE

The J-Box cover need not be removed from the J-Box in order to move the J-Box. Do NOT remove green ground screw inside J-Box. The ground screw is not threaded into the casing flange and can be lifted out of the clearance hole in casing while swinging the front edge of the J-Box outboard of the casing.

2. Cut wire tie on loop in furnace wires attached to J-box.
3. Move J-Box to desired location.
4. Fasten J-Box to casing with two screws removed in Step 1.
5. Route J-Box wires within furnace away from sharp edges, rotating parts and hot surfaces.

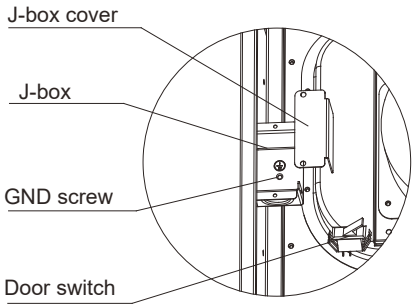

Fig. 9-1 J-box

9.2 Electrical Connection To J-box

Field-Supplied Electrical Box on Furnace J-Box Bracket See Fig. 9-1.

1. Remove cover from furnace J-Box.
2. Attach electrical box to furnace J-Box bracket with at least two field-supplied screws through holes in electrical box into holes in bracket. Use blunt-nose screws that will not pierce wire insulation.
3. Route furnace power wires through holes in electrical box and J-Box bracket, and make field-wire connections in electrical box. Use best practices (NEC in U.S. and CSA C22.1 in Canada) for wire bushings, strain relief, etc.
4. Route and secure field ground wire to green ground screw on J-Box bracket, OR FURNACE FAIL TO OPERATE.
5. Connect line voltage leads as shown in Fig. 9-3.
6. Reinstall cover to J-Box. Do not pinch wires between cover and bracket.

Electrical Box on Furnace Casing Side. See Fig. 9-1 and Fig 9-3.

⚠ WARNING

FIRE OR ELECTRICAL SHOCK HAZARD

Failure to follow this warning could result in personal injury, death, or property damage.
If field-supplied manual disconnect switch is to be mounted on furnace casing side, select a location where a drill or fastener cannot damage electrical or gas components.

1. Select and remove a hole knockout in the casing where the electrical box is to be installed.

NOTE

Check that duct on side of furnace will not interfere with installed electrical box.

2. Remove the desired electrical box hole knockout and position the hole in the electrical box over the hole in the furnace casing.
3. Fasten the electrical box to casing by driving two field-supplied screws from inside electrical box into casing steel.
4. Remove and save two screws holding J-Box. (See Fig. 9-1.)
5. Pull furnace power wires out of l/2-in. (13 mm) diameter hole in J-Box. Do not loosen wires from strain-relief wire-tie on outside of J-Box.
6. Route furnace power wires through holes in casing and electrical box and into electrical box.
7. Pull field power wires into electrical box.
8. Remove cover from furnace J-Box.
9. Route field ground wire through holes in electrical box and casing, and into furnace J-Box.
10. Reattach furnace J-Box to furnace casing with screws removed in Step 4.
11. Secure field ground wire to J-Box green ground screw.
12. Complete electrical box wiring and installation. Connect line voltage leads as shown in Fig. 9-3. Use best practices (NEC in U.S. and CSA C22.1 in Canada) for wire bushings, strain relief, etc.
13. Reinstall cover to J-Box. Do not pinch wires between cover and bracket.

9.3 Power Cord Installation In Furnace J-box

NOTE

Power cords must be able to handle the electrical requirements listed in Table 9-1. Refer to power cord manufacturer's listings.

1. Remove cover from J-Box.
2. Route listed power cord through 7/8-in (22 mm) diameter hole in J-Box.
3. Secure power cord to J-Box bracket with a strain relief bushing or a connector approved for the type of cord used.
4. Secure field ground wire to green ground screw on J-Box bracket.
5. Connect line voltage leads as shown in Fig. 9-3.
6. Reinstall cover to J-Box. Do not pinch wires between cover and bracket.

Table 9-1 Ratings & Physical / Electrical Data

Input		Output		Nominal Airflow	MAX. Unit	AFUE	Air Temp.Rise		Max Over-Current Protection Amps	Min.Wire Size (awg) @75 ft	Max.Outlet Air Rtemp	
MBH	KW	MBH	KW	CFM	Amps		°F	°C			°F	°C
40A	11.7	32	9.4	850	8.0	80	35	19.4	15	14	150	65.6
60A	17.6	48	14.1	1100	8.0	80	40	22.2	15	14	155	68.3
60B	17.6	48	14.1	1100	8.0	80	40	22.2	15	14	155	68.3
80B	23.4	64	18.8	1300	8.0	80	45	25.0	15	14	160	71.1
80C	23.4	64	18.8	1300	8.0	80	45	25.0	15	14	160	71.1
100C	29.3	80	23.4	1680	14.0	80	45	25.0	15	14	160	71.1
120D	35.2	96	28.1	1800	14.0	80	50	27.8	15	14	165	73.9

Annual Fuel Utilization Efficiency (AFUE) numbers are determined in accordance with DOE Test procedures.
National Electrical Code (NFPA-70-latest edition) and all local codes
The furnace shall be installed so that the electrical components are protected from water.

9.4 Bx Cable Installation In Furnace J-box

1. Remove cover from J-Box.
2. Route BX cable into 7/8-in. (22 mm) diameter hole in J-Box.
3. Secure BX cable to J-Box bracket with connectors approved for the type of cable used.
4. Secure field ground wire to green ground screw on J-Box bracket.
5. Connect line voltage leads as shown in Fig. 9-3.
6. Reinstall cover to J-Box. Do not pinch wires between cover and bracket.

9.5 24V Wiring

Make field 24V connections at the 24V terminal strip. (See Fig. 9-2)
Connect terminal Y as shown in Fig. 26 for proper cooling operation.
Use only AWG No. 18, color-coded, copper thermostat wire.
The 24V circuit contains an automotive-type, 3-amp.. fuse located on the control. Any direct shorts during installation, service, or maintenance could cause this fuse to blow. If fuse replacement is required, use ONLY a 3-amp.. fuse of identical size.

9.6 Accessories (Field Supplied)

1. Electronic Air Cleaner (EAC)

   Connect an accessory Electronic Air Cleaner (if used) using l/4-in female quick connect terminals to the two male 1/4-in quick-connect terminals on the control board marked EAC-H and NEUTRALS.

   The dry contact terminals are rated for 115V AC, 1.0 amps maximum and are energized during blower motor operation. (See Fig. 9-2)

2. Humidifier (HUM)

   Connect an accessory 115V AC, 0.5 amp. maximum humidifier (if used) to the 1/4-in male quick-connect HUM-H terminal and NEUTRALS terminal on the control board.The HUM terminal is energized when gas valve relay is energized. (See Fig.9-2)

NOTE

Low voltage accessories must use a step down transformer or an isolation relay.DO NOT connect low voltage accessories directly to the EAC or HUM terminals.

9.7 Grounding

The furnace must be electrically grounded in accordance with local codes or, in the absence of local codes, with the National Electrical Code, ANSI/NFPA 70, and /or the Canadian Electrical Code, CSA C22.1, Part 1, if an external electrical source is utilized.

9.8 R454B Leak Mitigation Kit for use with Furnace and Condensing Units

This furnace is capable of functioning with a mitigation system for R454B.Refer to the coil installation instructions for proper wiring instructions for a leak mitigation control and sensor function with a full system.

80% machine windshield setting	FAN SPEED							
	DIP SW				NOMINAL SPEED			
	S3-1	S3-2	S3-3	S3-4	H-heat	L-heat	H-cool	L-cool
100C/120D	* OFF	ON	OFF	OFF	4	3	3	2
	OFF	ON	ON	OFF	4	3	5	3
	OFF	ON	ON	ON	5	4	4	4
	OFF	ON	OFF	ON	4	3	4	3
60A/80B/ 80C	* ON	OFF	OFF	ON	5	5	5	4
	OFF	ON	OFF	ON	4	3	4	3
	OFF	ON	OFF	OFF	4	3	3	2
60B	OFF	ON	OFF	OFF	4	3	3	2
	*OFF	ON	ON	OFF	4	3	5	3
	OFF	ON	ON	ON	5	4	4	4
	OFF	ON	OFF	ON	4	3	4	3
40A	* ON	OFF	ON	ON	5	3	5	4
	OFF	OFF	ON	OFF	4	2	3	2
	ON	ON	OFF	ON	4	2	4	3

HEAT OFF DELAY		
DIP SW		NOMINAL (SECONDS)
S2-1	S2-2	
OFF	OFF	*90
ON	OFF	120
OFF	ON	150
ON	ON	180

COOL OFF DELAY		
DIP SW		NOMINAL (SECONDS)
S2-3	S2-4	
OFF	OFF	*60
ON	OFF	90
OFF	ON	120
ON	ON	150

W2 DELAY		
DIP SW		NOMINAL (MINUTES)
S1-1	S1-2	
OFF	OFF	*OFF
ON	OFF	RESERVED
OFF	ON	RESERVED
ON	ON	RESERVED

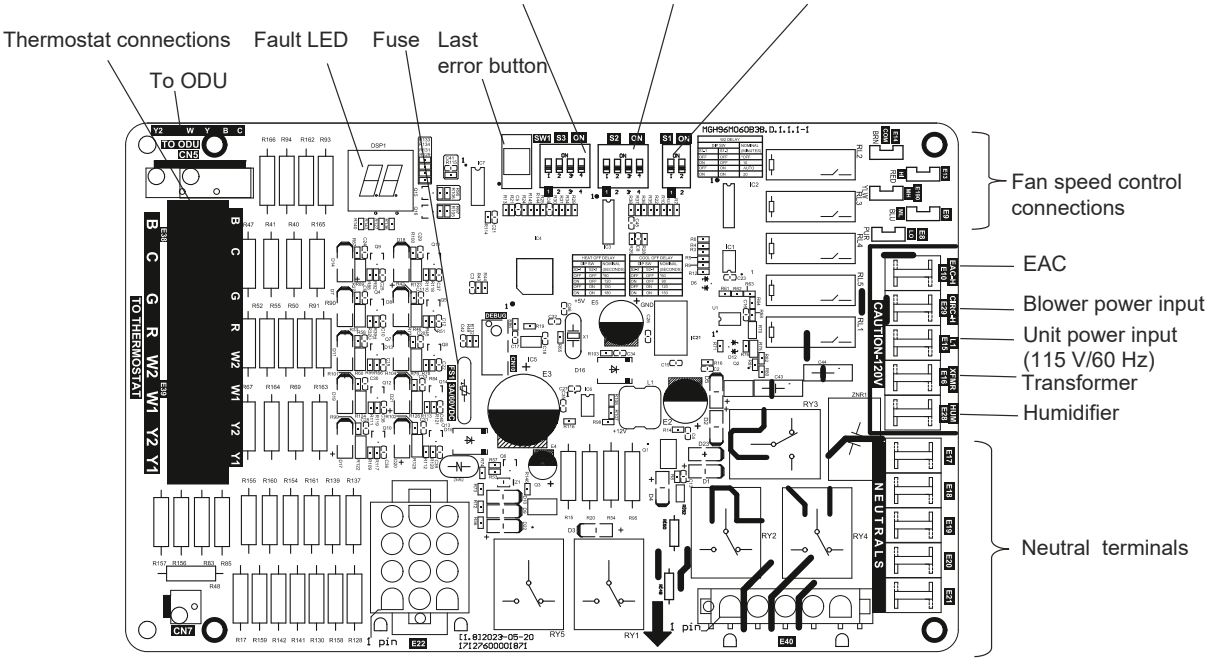

[ ] : means reserved

SERIES OF PRODUCTS		
SW2-4	OFF	80% GAS FURNACE *
	ON	RESERVED

80% MACHINE TYPE			
DIP SW			TYPE
SW2-1	SW2-2	SW2-3	
OFF	OFF	OFF	*
OFF	OFF	ON	40A,60A
OFF	ON	OFF	60B,80B
OFF	ON	ON	80C
ON	OFF	OFF	100C
ON	OFF	ON	120D

FAN SPEED		
SW1-1	OFF	NORMAL SPEED *
	ON	SLOW SPEED
SW1-2	OFF	RESERVED *
	ON	WRONG SETTING

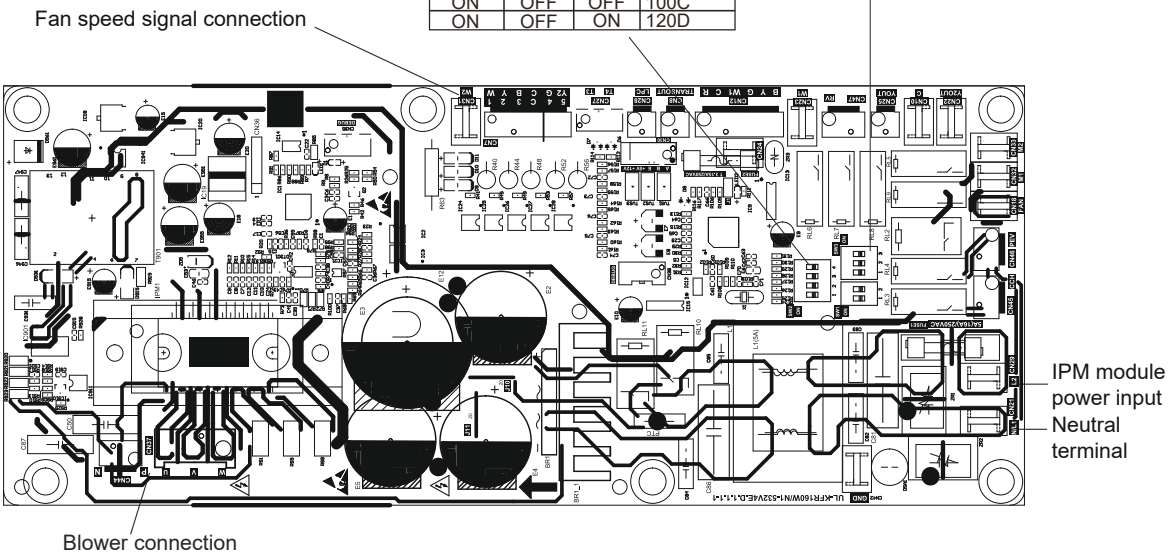

Fig. 9-2 Furnace Control

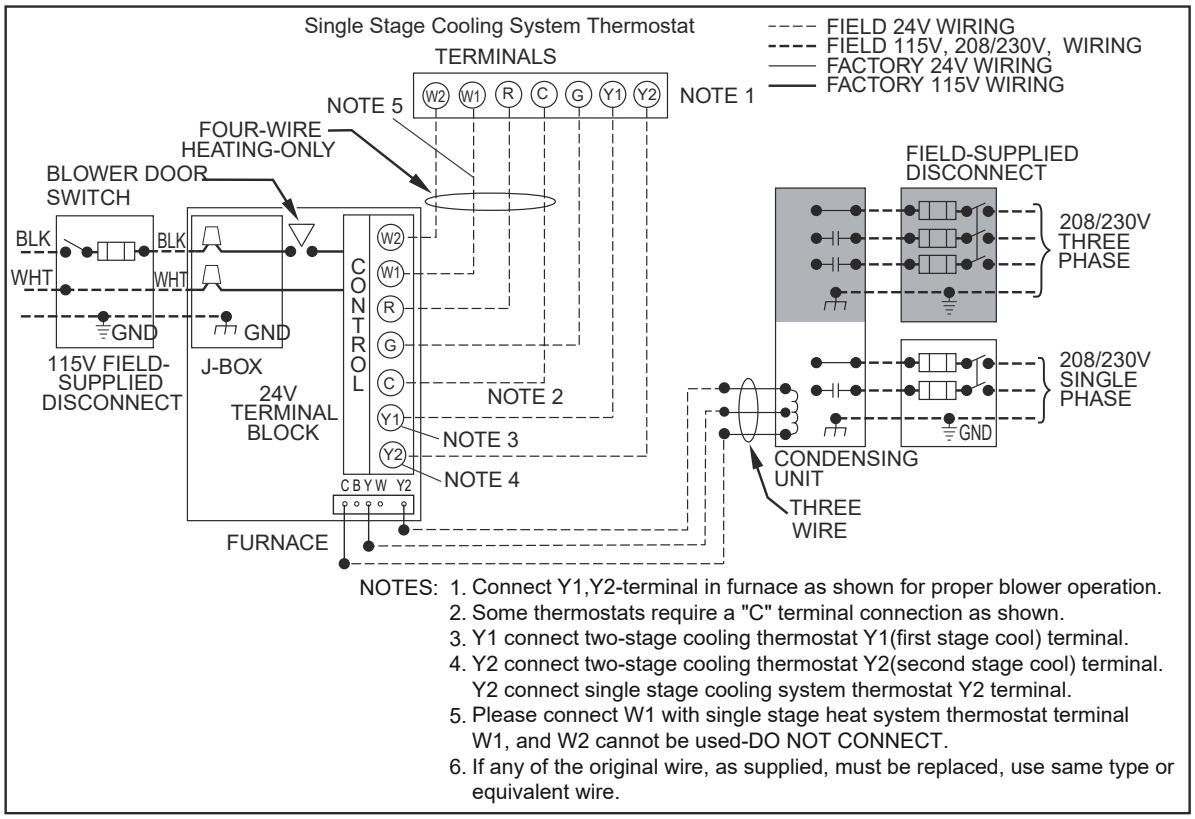

Fig.9-3 Heating and Cooling Application Wiring Diagram with I-Stage Thermostat

10 START-UP, ADJUSTMENT, AND SAFETY CHECK

10.1 General

⚠ WARNING

FIRE HAZARD

Failure to follow this warning could result in personal injury, death and/or property damage. This furnace is equipped with manual reset limit switches in the gas control area. The switches open and shut off power to the gas valve if a flame rollout or overheating condition occurs in the gas control area. DO NOT bypass the switches. Correct inadequate combustion air supply problem before resetting the switches.

⚠ CAUTION

CUT HAZARD

Failure to follow this caution may result in personal injury. Sheet metal parts may have sharp edges or burrs. Use care and wear appropriate protective clothing, safety glasses and gloves when handling parts and servicing furnaces.

1. Maintain 115V wiring and ground. Improper polarity will result in rapid flashing LED and no furnace operation. (See Fig. 9-3)
2. Make thermostat wire connections at the 24-V terminal block on the furnace control. Failure to make proper connections will result in improper operation. (See Fig. 9-3.)
3. Gas supply pressure to the furnace must be greater than 4.5-in. wc (0.16 psig) but not exceed 14-in. wc (0.5 psig).
4. Check all manual-reset switches for continuity.
5. Install blower compartment door. Door must be in place to operate furnace.
6. Replace outer door.

10.2 Start-up Procedures

⚠ WARNING

FIRE AND EXPLOSION HAZARD

Failure to follow this warning could cause personal injury, death and/or property damage. Never test for gas leaks with an open flame. Use a commercially available soap solution made specifically for the detection of leaks to check all connections.

1. Purge gas lines after all connections have been made.
2. Check gas lines for leaks.

⚠ WARNING

ELECTRICAL SHOCK HAZARD

Failure to follow this warning could result in personal injury, or death.
Blower access door switch opens 115V power to control.
No component operation can occur unless switch is closed.
Caution must be taken when manually closing this switch for service purposes.

3. This furnace is also equipped with a self-diagnosing electronic control module. In the event a furnace component is not operating properly, the control module LED will flash on and off in a factory-programmed sequence, depending on the problem encountered.
   This light can be viewed through the observation window in the blower access door. Refer to the Troubleshooting Chart for further explanation of the lighting codes.
   Follow the start-up and adjustment items, refer to further information in Operational Checks.

10.3 Furnace Start-up

1. Close the manual gas shutoff valve external to the furnace.
2. Turn off the electrical power to the furnace.
3. Set the room thermostat to the lowest possible setting.
4. Remove the burner compartment door.

NOTE

This furnace is equipped with an ignition device which automatically lights the burner. Do not try to light the burner by hand.

5. Gas Valve: Push the switch to the OFF position.
6. Wait five minutes to clear out any gas. Then smell for gas, including near the floor.
7. If gas can be smelled following the five minute waiting period in Step 6, If you do not smell gas after five minutes. Push the switch to the ON position.

⚠ WARNING

FIRE AND EXPLOSION HAZARD

Failure to follow this warning could cause personal injury, death and/or property damage. Never test for gas leaks with an open flame. Use a commercially available soap solution made specifically for the detection of leaks to check all connections.

8. Replace the door on the front of the furnace.
9. Open the manual gas valve external to the furnace.
10. Turn on the electrical power supply to the furnace.
11. Set the room thermostat to the desired temperature.

NOTE

There is an approximate 37 second delay between thermostat energizing and burner firing.

FURNACE SHUTDOWN
1. Set the thermostat to lowest setting.
2. Turn off the electrical power supply to the furnace.
3. Gas Valve : Push switch to the OFF position.
4. Close manual gas shutoff valve external to the furnace.
5. Replace the door on the unit.

10.4 Sequence of Operation

NOTE

Furnace control must be grounded for proper operation or control will lock out. Control is grounded through green wire routed to gas valve and manifold bracket screw. Follow the sequence of operation through the different modes.

Read and follow the wiring diagram very carefully.
The blower door must be installed for power to be conducted through the blower door interlock switch ILK to the furnace control CPU, transformer TRAN, inducer motor IDM, blower motor BLWM, hot--surface igniter HSI, and gas valve GV.

1. Heating mode

(See Fig. 9-3 for thermostat connections.)
The wall thermostat "calls for heat," closing the R--to--W1circuit.The furnace control performs a self--check, verifies the pressure switch contacts PRS are open, and starts the inducer motor IDM.

a. Inducer Prepurge Period-- The inducer blower and optional humidifier are energized and the ignitor is powered within one second. The Pressure Switch contacts PRS close to begin a 15--second prepurge period.
b. Igniter Warm--Up-- At the end of the prepurge period, the Hot--Surface igniter HSI is energized for a 17--second igniter warm--up period.

This controller has an adaptive algorithm that adjusts the duration of the ignitor warm-up, to extend ignitor life. Upon initial application of power, the warm-up time is 17 seconds. The ignitor on-time will then be increased or decreased depending on whether or not flame is achieved. The warm-up time is limited to a maximum of 27 seconds.

Upon a call for heat, if the warm-up time has not been locked, it will be decreased by one second. This reduction of the ignitor ontime will continue until flame fails to be achieved (resulting in a retry).

c. Trial--for--Ignition Sequence-- When the igniter warm--up period is completed, themain gas valve relay contacts GVR close to energize the gas valve GV, the gas valve opens 4 seconds.The gas valve GV permits gas flow to the burners where it is ignited by the HSI. a 4--second flame proving period begins.

d. Flame--Proving--When the burner flame is proved at the flame--proving sensor electrode FSE, the furnace control CPU begins the blower--ON delay period and continues to hold the gas valve GV open.

If flame is not detected, the gas valves is de-energized, the ignitor is turned off,and the furnace control goes into the "retry" sequence.The "retry" sequence provides a 60--second wait following an unsuccessful ignition attempt (flame not detected). After this wait, the ignition sequence is restarted with an additional 10 seconds of ignitor warm-up time. If this ignition attempt is unsuccessful, one more retry will be made before the control goes into system lockout.

If flame is detected, then lost, the furnace control will repeat the initial ignition sequence for a total of two "recycles". After two unsuccessful "recycle" attempts, the control will go into system lockout.

If flame is established for more than 10 seconds after ignition, the furnace controller will clear the ignition attempt (or retry) counter. If flame is lost after 10 seconds, it will restart the ignition sequence.
This can occur a maximum of five times before system lockout.

e. Blower--On Delay-- If the burner flame is proven, the blower motor is energized on high speed 30 seconds after the gas valve GV is energized. Simultaneously, the electronic air cleaner terminal EAC is energized and remains energized as long as the blower motor BLWM is energized.

f. Blower--Off Delay--When the thermostat is satisfied, the R--to--W1 circuit is opened, de--energizing the gas valve G V, stopping gas flow to the burners, the IDM will remain energized for a 15--second post--purge period.
Humidifier is de-energized. The blower motor BLWM and air cleaner terminal EAC will remain energized for 90, 120, 150, or 180 seconds (depending on the HEAT-OFF delay selection).
The furnace control CPU is factory--set for a 90--second HEAT-OFF delay.

TIMING SPECIFICATIONS

(All times are in seconds, unless noted otherwise)
* These times will vary depending on option switch position. The control is factory-set at 30 seconds heat delay-to-fan-on, 90 seconds heat delay-tofan-off and 60 seconds cool delay-to-fan-off. See OPERATION section for further information.

Event	Definition	Time
Pre-purge Time	The period of time intended to allow for the dissipation of any unburned gas or residual products of combustion at the beginning of a furnace operating cycle prior to initiating ignition.	15s
Igniter Warm-up Time	The length of time allowed for the igniter to heat up prior to the initiation of gas flow.	17s
Trial for Ignition Period (TFI)	The period of time between initiation of gas flow and the action to shut off the gas flow in the event of failure to establish proof of the supervised ignition source or the supervised main burner flame.	4s
Ignition Activation Period (IAP)	The period of time between energizing the main gas valve and deactivation of the ignition means prior to the end of TFI	3s
Retries	The additional attempts within the same thermostat cycle for ignition when the supervised main burner flame is not proven within the first trial for ignition period.	2 times
Valve Sequence period	Valve sequence period equals 4 seconds trial for ignition period x (1 initial try + 2 retries) + 12 seconds.	12s
Inter-purge	The period of time intended to allow for the dissipation of any unburned gas or residual products of combustion between the failed trial for ignition and the retry period.	60s

Event	Definition	Time
Post-purge Time	The period of time intended to allow for the dissipation of any unburned gas or residual products of combustion at the end of a furnace burner operating cycle. Post-purge begins at the loss of flame sense.	15s
Lock-Out Time	ANSI standard rated module timing.	300s
Heat Delay-To-Fan-On	The period of time between proof of the supervised main burner flame and the activation of the blower motor at Heat speed.	30s
Heat Delay-To-Fan-Off*	The period of time between the loss of a call for heat and the deactivation of the blower motor at Heat speed.	90s 120s 150s 180s
Cool Delay -To-Fan-On	The period of time after a thermostat demand for cool before energizing the circulator blower motor at Cool speed.	1
Cool Delay-To-Fan-Off	The period of time between the loss of a call for cool and the deactivation of the blower motor at Cool speed.	60s 90s 120s 150s
Automatic Reset Time	After one (1) hour of internal or external lockout, the control will automatically reset itself and go into an auto restart purge for 60 seconds.	60 minutes

2. Cooling Mode

In a typical single stage cooling system (Y connection), a call for cool is initiated by closing the thermostat contacts. This energizes the compressor and the electronic air cleaner (optional).
The circulator will be energized at cool speed after the COOL delay-to-fan-on period. After the thermostat is satisfied, the compressor is de-energized and the COOL delay-to-fan-off period begins. After the COOL delay-to-fan-off period ends, the circulator and the electronic air cleaner are de-energized.

3. FAN Mode

If the thermostat fan switch is moved to the ON position, the circulator fan (low heat speed) and the electronic air cleaner (optional) are energized. When the fan switch is returned to the AUTO position, the circulator and electronic air cleaner are de-energized.

10.5 Gas Manifold Pressure Measurement And Adjustment

⚠ CAUTION

To prevent unreliable operation or equipment damage, the gas manifold pressure must be as specified on the unit rating palte. Only minor adjustments should be made by adjusting the gas valve pressure regulator.

This valve is shipped from the factory with the regulator preset.

Consult the appliance rating plate to ensure burner manifold pressure is as specified. If another outlet pressure is required, follow these steps. (See Table 10-1 and Fig. 10-1)

1. Turn OFF all electrical power to the system.
2. Using a small flathead screwdriver, loosen outlet pressure tap (boss) screw one turn. Do not remove screw.
3. Attach a hose and manometer to the outlet pressure boss of valve to over lap at least 3/8”
4. Turn ON system power and set thermostat to a call for heat.
5. Using a leak detection solution or non-chlorine soap suds, check for leaks at hose connection. Bubbles forming indicate a leak. SHUT OFF GAS AND FIX ALL LEAKS IMMEDIATELY!
6. Remove regulator screw cover. Turn regulator screw either clockwise to increase pressure or counter clockwise to decrease.
   Always adjust regulator to provide the correct pressure according to the original equipment manufacturer specifications listed on the appliance rating plate.
7. Replace regulator screw cover and finger-tighten securely.
8. Turn OFF all electrical power to the system.
9. Remove manometer and hose from outlet pressure tap.
10. Tighten outlet pressure tap clockwise 7 in-lbs minimum to seal port.
11. Turn ON system power and set thermostat to call for heat.
12. Using a leak detection solution or non-chlorine soap suds, 1` check for leaks at hose connection. Bubbles forming indicate a leak. SHUT OFF GAS AND FIX ALL LEAKS IMMEDIATELY!

The A801X is a single stage furnace utilizing the two stage gas valve, the factory connection of Lo and Hi Fire tied together allows the A801X to run only in High Fire for Single Stage operation.

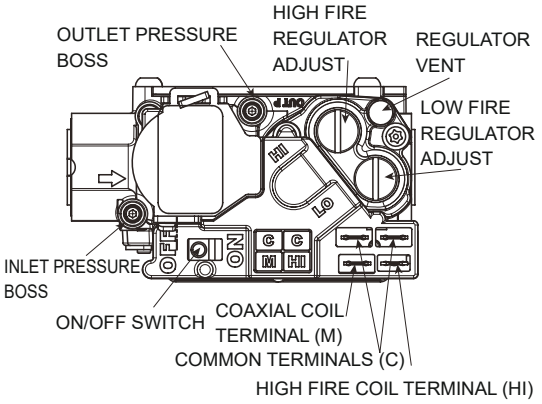

NOTE: M ternimial is used to give power supply for main coil to adjust the whole gas airflow,HI terminal is used to adjust the high and low fire.

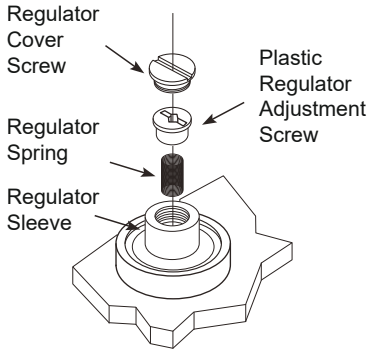

Fig. 10-1 Gas Valve and Regulator Adjustment

Measure gas manifold pressure with burners firing. Adjust manifold pressure per the Manifold Gas Pressure table.

Table 10-1 Manifold Gas Pressure

Manifold Gas Pressure		
Input Rating kBtu/h	Natural Gas	Propane Gas
40A	3.0'' W.C.	10.5'' W.C.
60A	3.5'' W.C.	10'' W.C.
60B	3.5'' W.C.	10'' W.C.
80B	3.8'' W.C.	10'' W.C.
80C	3.8'' W.C.	10'' W.C.
100C	3.8'' W.C.	10'' W.C.
120D	3.8'' W.C.	10.5'' W.C.

The final manifold pressure must not vary more than ± 0.3 w.c. from specified manifold pressure.
Any necessary major changes in gas flow rate should be made by changing the size of the burner orifice.

10.6 Gas Input Rate Measurement (Natural Gas Only)

The gas input rate to the furnace must never be greater than that specified on the unit rating plate. To measure natural gas input using the gas meter, use the following procedure.

1. Turn OFF the gas supply to all other gas-burning appliances except the furnace.
2. While the furnace is operating, time and record one complete revolution of the smallest gas meter dial.
3. Calculate the number of seconds per cubic foot (sec/ft^3) of gas being delivered to the furnace. If the dial is a one cubic foot dial， divide the number of seconds recorded in step 2 by one. If the dial is a two cubic foot dial， divide the number of seconds recorded in step 2 by two.
4. Calculate the furnace input in Btus per hour (Btu/h). Input equals the installation's gas heating value multiplied by a conversion factor (hours to seconds) divided by the number of seconds per cubic foot. The measured input must not be greater than the input indicated on the unit rating plate.

   EXAMPLE:
   Installation's gas heating (HTG) value: 1,000 Btu/ft^3 (Obtained from gas supplier)
   Installation's seconds per cubic foot: 34 sec/ft^3
   Conversion Factor (hours to seconds): 3600 sec/hr
   Input = (Htg. value x 3600) + seconds per cubic foot
   Input = (1,000 Btu/ft^3 x 3600 sec/hr) + 34 sec/ft^3
   Input = 106,000 Btu/h
   This measured input must not be greater than the input indicated on the unit rating plate.
5. Turn ON gas and relight appliances turned off in step 1.Ensure all the appliances are functioning properly and that all pilot burners are operating.

10.7 Temperature Rise Adjustment

Air temperature rise is the temperature difference between supply and return air. The proper amount of temperature rise is usually obtained when the unit is operated at the rated input with the "as shipped" blower speed. If the correct amount of temperature rise is not obtained, it may be necessary to change the blower speed.

An incorrect temperature rise can cause condensing in or overheating of the heat exchanger. Determine and adjust the temperature rise as follows. The temperature rise must be within the range specified on the rating plate.

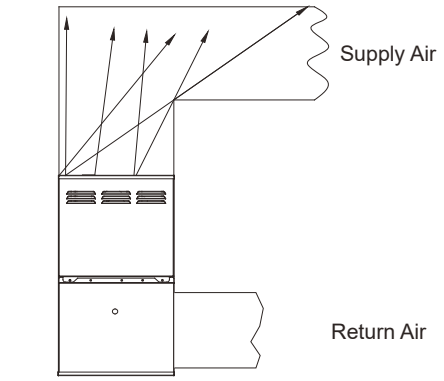

Fig . 10-2 Temperature Rise Measurement

Temperature Rise Adjustment

1. Operate furnace with burners firing approximately 15 minutes. Ensure all registers are open and all duct ‘ dampers are in their final (fully or partially open) position.
2. Place thermometers in the return and supply ducts as close to the furnace as possible. Thermometers must not be influenced by radiant heat by being able to "see" the heat exchanger.
3. Subtract the return air temperature from the supply air temperature to determine the air temperature rise. Allow adequate time for thermometer readings to stabilize.
4. Adjust temperature rise by adjusting the circulator blower speed. Increase blower speed to reduce temperature rise.
   Decrease blower speed to increase temperature rise.
   Refer to the following section for speed changing details.

10.8 Circulator Blower Speed Adjustment

⚠ WARNING

ELECTRICAL SHOCK HAZARD

Failure to follow this warning could result in personal injury, or death.
Turn OFF power to the furnace before changing speed taps.

This furnace is equipped with a ECM circulator blower motor. This blower provides ease in adjusting blower speeds. The cooling blower speed is shipped set on 5(4). High heat ships on 4(3).These blower speeds should be adjusted by the installer to match the installation requirements so as to provide the correct heating temperature rise and the correct cooling CFM.

Refer to Table 6-2 Air Delivery - CFM (Without Filter)*

To adjust the circulator blower speed， proceed as follows:

1. Turn OFF power to the furnace.

2. Select the heating and cooling blower speeds that match the installation requirements from the Table 7-1 Air Delivery - CFM (Without Filter)*
3. Relocate desired motor leads to the circulator blower heat and cool speed terminals on the integrated control module. (Terminals are identified as HEAT and COOL (hot)). If heating and cooling blower speeds are the same， a jumper wire must be used between the heat and cool terminals.
4. Turn ON power to furnace.
5. Verify proper temperature rise as outlined in Temperature Rise section.

CIRCULATOR BLOWER FAN TIMING ADJUSTMENT

NOTE

Items in this section refer to the air circulator blower fan, NOT to the induced draft blower. The induced draft blower timing sequence is not adjustable. The circulator blower fan timing is adjustable.

As shipped, the circulator blower fan will remain on for 180 seconds after the gas valve closes. When a call for cooling occurs, the circulator fan comes on and remains on for 90 seconds after the call for cooling ends. During normal heating operation, the circulator fan will come on approximately 30 seconds after the gas valve opens.

HEAT OFF DELAY		
DIP SW		NOMINAL (MINUTES)
S2-1	S2-2	
*OFF	OFF	90
ON	OFF	120
OFF	ON	150
ON	ON	180

COOL OFF DELAY		
DIP SW		NOMINAL (MINUTES)
S2-3	S2-4	
*OFF	OFF	60
ON	OFF	90
OFF	ON	120
ON	ON	150

Fig. 10-3 Adjustment Switches
(Not present on all models)

11 OPERATIONAL CHECKS

WARNING

FIRE, EXPLOSION, ELECTRICAL SHOCK, AND CARBON MONOXIDE POISONING HAZARD

To avoid personal injury or death. Do not remove any interal compartment covers or attempt any adjustment. Electrical compartments are contained in both compartments. Contact a qualified service agent at once if an abnormal flame appearance should develop.

Burner Flame

The burner flames should be inspected with the burner compartment door installed. Flames should be stable， quiet, soft, and blue (dust may cause orange tips but they must not be yellow). Flames should extend directly outward from the burners without curling, floating,or lifting off, and should enter heat-exchanger tube.
Flames must not impinge on the sides of the heat exchanger firing tubes.

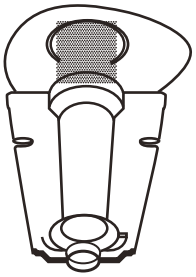

Check the burner flames for
1. Good adjustment
2. Stable, soft and blue
3. Not curling, floating, or lifting off

Fig. 11-1 Burner Flame

12 SAFETY CIRCUIT DESCRIPTION

12.1 General

A number of safety circuits are employed to ensure safe and proper furnace operation. These circuits serve to control any potential safety hazards and serve as inputs in the monitoring and diagnosis of abnormal function. These circuits are continuously monitored during furnace operation by the integrated control module.

12.2 Integrated Control Module

The integrated control module is an electronic device which controls all furnace operations. Responding to the thermostat, the module initiates and controls normal furnace operation, and monitors and addresses all safety circuits. If a potential safety concern is detected, the module will take the necessary precautions and provide diagnostic information through an LED.

12.3 Primary Limit

The primary limit control is located on the partition panel and monitors heat exchanger compartment temperature. It is an automatic reset, temperature sensor. The limit guards against the overheating resulting from insufficient air passing over the heat exchanger.

12.4 Reverse Flow Swith

The reverse flow switch is located on the air circulating blower housing. It is an automatic reset, temperature sensor. Reverse flow switch shuts off the furnace when air circulating blower fails on downflow or horizontal installations to prevent air filter or other parts from overhating by hot air.

12.5 Rollout Limits

The rollout limit controls are mounted on the burner/manifold assembly and monitor the burner flame. They are manual-reset, temperature sensors. This limit guards against burner flames not being properly drawn into the heat exchanger.

12.6 Pressure Switches

The pressure switches are normally-open, negative air pressure activated switches. They monitor the airflow (combustion air and flue products) through the heat exchanger via pressure taps located on the induced draft blower. These switches guard against insufficient airflow (combustion air and flue products) through the heat exchanger.

12.7 Flame Sensor

The flame sensor is a probe mounted to the burner/manifold assembly which uses the principle of flame rectification to determine the presence or absence of flame.

⚠ WARNING

FIRE, EXPLOSION OR CARBON MONOXIDE POISONING HAZARD

Failure to replace with proper control could result in fire, explosion or carbon monoxide poisoning.

This appliance uses a NEGATIVE PRESSURE REGULATED gas control.

Replace ONLY with the same model number or as specified by the manufacturer.

13 TROUBLESHOOTING

13.1 Electrostatic Discharge (ESD) Precautions

NOTE

Discharge body's static electricity before touching unit. An electrostatic discharge can adversely affect electrical components.
Use the following precautions during furnace installation and servicing to protect the integrated control module from damage.
By putting the furnace, the control, and the person at the same electrostatic potential, these steps will help avoid exposing the integrated control module to electrostatic discharge. This procedure is applicable to both installed and uninstalled (ungrounded) furnaces.

1. Disconnect all power to the furnace. Do not touch the integrated control module or any wire connected to the control prior to discharging your body's electrostatic charge to ground.
2. Firmly touch a clean， unpainted, metal surface of the furnace away from the control. Any tools held in a person's hand during grounding will be discharged.
3. Service integrated control module or connecting wiring following the discharge process in step 2. Use caution not to recharge your body with static electricity; (i.e., do not move or shuffle your feet, do not touch ungrounded objects, etc.). If you come in contact with an ungrounded object, repeat step 2 before touching control or wires.
4. Discharge your body to ground before removing a new control from its container. Follow steps 1 through 3 if installing the control on a furnace. Return any old or new controls to their containers before touching any ungrounded object.The primary limit control is located on the primary limit control is located on the partition panel and de-energized..

13.2 Diagnostic Chart

Refer to the troubleshooting chart on the following pages for assistance in determining the source of unit operational problems.
The red diagnostic LED blinks to assist in troubleshooting the unit.
The number of blinks refer to a specific code. (See Table 13-1)

13.3 Resetting From Lockout

Furnace lockout results when a furnace is unable to achieve ignition after three attempts. It is characterized by a non-functioning furnace and a one flash diagnostic LED code from the red LED. If the furnace is in "lockout", it will (or can be) reset in any of the following ways:

1. Automatic reset. The integrated control module will automatically reset itself and attempt to resume normal operations following a one hour lockout period.
2. Manual power interruption. Interrupt 115 volt power to the furnace for 1 - 20 seconds.
3. Manual thermostat cycle. Lower the thermostat so that there is no longer a call for heat for 1 - 20 sec.

NOTE

If the condition which originally caused the lockout still exists, the control will return to lockout. Refer to the diagnostic Chart for aid in determining the cause.

⚠ WARNING

FIRE, EXPLOSION AND ASPHYXIATION HAZARD

Improper adjustment, alteration, service, maintenance or installation can cause serious injury or death.

Read and follow instructions and precaution in User’s information Manual provided with this furnace.

Installation and service must be performed by a qualified service agency or the gas supplier.

Table 13-1 Troubleshooting Chart

Error code	Error/Condition	Comments/Troubleshooting
FE	Gas valve relay stuck close	Verify the gas valve is operating and shutting down properly. Flame in burner assemble should extinguish promptly at the end of the cycle. Check orifices and gas pressure
E1	Shorted pressure	Pressure switch stuck closed. Check switch function, verify inducer is turning off.
E2	Open pressure	Check pressure switch function and tubing. Verify inducer is turning on the pulling sufficient vacuum to engage switch.
E4	Open Pressure Switch locked	If the pressure switch cycles 15 times (open, closed) during one call for heat from the thermostat the control will lockout. Check pressure switch for fluttering, inconsistent closure or poor vacuum pressure.
E5	Open thermal limit,Rollout switch	Verify continuity through rollout switch, primary limit, reverse flow limit circuit.
E6	Open thermal limit,Rollout switch (After 5 times)	
E7	Ignition failure locked	Failure to sense flame is often caused by carbon deposits on the flame sensor, a disconnected or shorted flame sensor lead or a poorly grounded furnace. Carbon deposits can be cleaned with emery cloth. Verify sensor is not contacting the burner and is located in a good position to sense flame. Check sensor lead for shorting and verify furnace is grounded properly.
E8	Flame loss locked	Check items for exceeded retries listed above and verify valve is not dropping out allowing flame to be established and then lost.
FL	Flame low	Low flame sense current is often caused by carbon deposits on the flame sensor, a poorly grounded furnace or a mis-aligned flame sense probe. Carbon deposits can be cleaned with emery cloth. Check for improve furnace and module ground. Verify sensor is located in or very near flame as specified by the appliance manufacturer.
Pr	Power reversed	Verify the control and furnace are properly grounded. Check and reverse polarity (primary) if incorrect.
Fo	Fuse open	Comment - Low voltage circuit over current condition. Troubleshooting - Locate shorted wiring/component and repair/replace.
bE	Board error	Replace electric control board.
nL	Signal error	Ensure the wire control signal refer to user manual.

1 Integrated control module will automatically attempt to reset from lockout after one hour.

2 LED Flash code will cease if power to the control module is interrupted through the disconnect or door switch.

14 SERVICE AND MAINTENANCE PROCEDURES

⚠ WARNING

ELECTRICAL SHOCK, FIRE OR EXPLOSION HAZARD

Failure to follow safety warnings exactly could result in dangerous operation, serious injury, death or property damage.

Improper servicing could result in dangerous operation, serious injury, death or property damage.

- Before servicing, disconnect all electrical power to furnace.
- When servicing controls, label all wires prior to disconnecting.
  Reconnect wires correctly.
- Verify proper operation after servicing.

⚠ WARNING

FIRE, EXPLOSION OR CARBON MONOXIDE POISONING HAZARD

Failure to replace with proper control could result in fire, explosion or carbon monoxide poisoning.

This appliance uses a negative pressure chamber inside the pipeline for gas control.

Replace ONLY with the same model number or as specified by the manufacturer.

14.1 Annual Inspection

The furnace should be inspected by a qualified installer, or service agency at least once per year. This check should be performed at the beginning of the heating season. This will ensure that all furnace components are in proper working order and that the heating system functions appropriately. Pay particular attention to the following items. Repair or service as necessary.

(a) All flue gas carrying areas external to the furnace (i.e. chimney, vent connector) are clear and free of obstructions.

(b) The vent connector is in place, slopes upward and is physically sound without holes or excessive corrosion.

(c) The return-air duct connection(s) is physically sound, is sealed to the furnace casing, and terminates outside the space containing the furnace.

(d) The physical support of the furnace is sound without sagging, cracks, gaps, etc, around the base so as to provide a seal between the support and the base.

(e) There are no obvious signs of deterioration of the furnace.

(f) The pilot and burner flames are in good adjustment.

14.2 Filters

A return air filter is not supplied with this furnace; however, there must be a means of filtering all of the return air. The installer will supply filter(s) at the time of installation.

FILTER MAINTENANCE

Improper filter maintenance is the most common cause of inadequate heating or cooling performance. Filters should be cleaned (permanent) or replaced (disposable) every one month or as required.
When rep|acing a filter, it must be replaced with a filter of the same type and size.

Become familiar with filter location and procedures for removal, cleaning and replacing them. If help is needed, contact the installer of the furnace or a qualified servicer.

FILTER REMOVAL

Depending on the installation, differing filter arrangements can be applied. A media air filter or electronic air cleaner can be used as an alternate filter.

Follow the filter sizes given in the Recommended Minimum Filter size table to ensure proper unit performance.

For further details, see your distributor.

UPRIGHT FILTER REMOVAL

To remove filters from an external filter rack in an upright upflow installation, follow the directions provided with external filter rack kit.

Clean, wash and dry a permanent filter. When using a permanent filter, both sides should be sprayed with a dust adhesive as recommended on the adhesive container. Spray adhesives for use with permanent filters can be found at some hardware stores.

BE SURE AIRFLOW DIRECTION ARROW POINTS TOWARDS THE BLOWER.

Inspect filter. If your dirty filter is the disposable type, replace dirty filter with the same type and size filter. If your dirty filter is a permanent filter, clean as follows:

- Wash, rinse, and dry the permanent filters. Both sides should then be sprayed with a filter adhesive as is recommended on the adhesive container. Many hardware stores stock spray adhesives for use with permanent filters.
- If badly torn or uncleanable, these filters must be replaced by equal size permanent, high velocity filters. Throwaway filters must not be used as replacement for permanent filters. Under normal use, permanent filters should last for several years.

14.3 INDUCED DRAFT AND CIRCULATING BLOWER MOTORS

The bearings in the induced draft blower and circulaing blower motors are permanently lubricated by the manufacturer. No further lubrication is required. Check motor windings for accumulation of dust which may cause overheating. Clean as necessary.

14.4 FLAME SENSOR (QUALIFIED SERVICER ONLY)

Under some conditions， the fuel or air supply can create a nearly invisible coating on the flame sensor. This coating acts as an insulator causing a drop in the flame sense signal. If the flame sense signal drops too low, the furnace will not sense flame and will lock out. The flame sensor should be carefully cleaned by a qualified servicer using emery cloth or steel wool.

IGNITER (QUALIFIED SERVICER ONLY)

If the igniter and the surrounding air are at about 70°F and the igniter wires are not connected to any other electrical components, the resistance of the igniter should not exceed 200 ohms. If it does, the igniter should be replaced.

14.5 Burners

⚠ WARNING

FIRE, EXPLOSION, ELECTRICAL SHOCK, AND CARBON MONOXIDE POISONING HAZARD

To avoid personal injury or death, do not remove any integral compartment covers or attempt any manual adjustments. Electrical components are contained in the respective compartments. Contact a qualified service technician if the appearance of any abnormal flame develops.

Periodically during the heating season, make a visual check of the burner flames. Turn the furnace on at the thermostat. Wait a few minutes, since any dislodged dust will alter the normal flame appearance. Flames should be stable, quiet, soft and blue with slightly orange tips. They should not be yellow. They should extend directly outward from the burner ports without curling downward, floating or lifting off the ports. See Fig.11-1.

NOTE

Only a qualified contractor, installer or service agency should clean the burners, if the burners get a heavy accumulation of soot and carbon.

14.6 Cleaning Heat Exchanger

The following steps should be performed by a qualified service agency:

NOTE

If the heat exchangers get a heavy accumulation of soot and carbon, they should be replaced rather than trying to clean them thoroughly. A heavy build-up of soot and carbon indicates that a problem exists which needs to be corrected, such as improper adjustment of manifold pressure, insufficient or poor quality combustion air, incorrect size or damaged manifold orifice(s), improper gas, or a restricted heat exchanger. Action must be taken to correct the problem.

If it becomes necessary to clean the heat exchangers because of dust or corrosion, proceed as follows:

1. Turn OFF gas and electrical power to furnace.
2. Remove outer access door.
3. Disconnect vent connector from furnace vent elbow.
4. For downflow or horizontal furnace having an internal vent pipe, remove internal vent pipe within the casing.
5. Disconnect wires to the following components. Mark wires to aid in reconnection of (be careful when disconnecting wires from switches because damage may occur):
   a. Draft safeguard switch.
   b. Inducer motor.
   c. Pressure switch(es).
   d. Limit overtemperature switch.
   e. Gas valve.
   f. Hot surface igniter.
   g. Flame-sensing electrode.
   h. Flame rollout switches.
6. Remove screws that fasten the collector box assembly to the cell panel. Be careful not to damage the collector box.
   Inducer assembly and elbow need not be removed from collector box.
7. Disconnect gas line from gas manifold.
8. Remove the 5 screws that attach the burner assembly to the cell panel. The gas valve and individual burners need not be removed from support assembly.

NOTE

Be very careful when removing burner assembly to avoid breaking igniter. See Fig. 14-1 and Fig.14-2 for correct igniter location.

9. Using field-provided 25-caliber rifle cleaning brush, 36-in. (914 mm) long, 1/4" diameter steel spring cable, a variable speed, reversible electric drill, and vacuum cleaner, clean cells as follows:
   a. Remove metal screw fitting from wire brush to allow insertion into cable.
   b. Insert the twisted wire end of brush into end of spring cable, and crimp tight with crimping tool or crimp by striking with ball-peen hammer. TIGHTNESS IS VERY IMPORTANT.

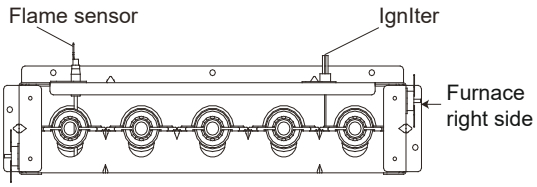

Fig. 14-1 Igniter Position-1

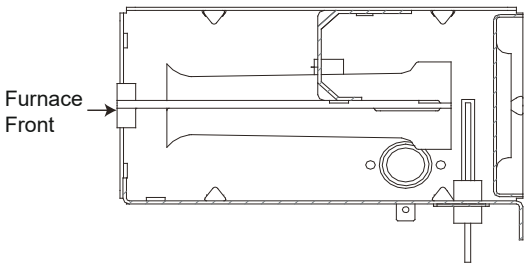

Fig. 14-2 Igniter Position-2

NOTE

The materials needed in item 9 can usually be purchased at local hardware stores.

(1.) Attach variable-speed, reversible drill to the end of spring cable (end opposite brush).
(2.) Insert brush end of cable into the outlet opening of cell and slowly rotate with drill. DO NOT force cable. Gradually insert cable into upper pass of cell. (See Fig. 14-3.)
(3.) Work cable in and out of cell 3 or 4 times to obtain sufficient cleaning. DO NOT pull cable with great force. Reverse drill and gradually work cable out.
(4.) Insert brush end of cable in burner inlet opening of cell, and proceed to clean 2 lower passes of cell in same manner as upper pass.
(5.) Repeat foregoing procedures until each cell in furnace has been cleaned.
(6.) Using vacuum cleaner, remove residue from each cell.
(7.) Using vacuum cleaner with soft brush attachment, clean burner assembly.
(8.) Clean flame sensor with fine steel wool.
(9.) Reinstall burner assembly. Center burners in cell openings.

10. Remove old sealant from cell panel and collector box flange.
11. Spray releasing agent on the heat exchanger cell panel where collector box assembly contacts cell panel.

NOTE

A releasing agent such as cooking spray or equivalent (must not contain corn or canola oil, aromatic or halogenated hydrocarbons or inadequate seal may occur) and RTV sealant (G.E. 162, 6702, or Dow-Corning 738) are needed before starting installation. DO NOT substitute any other type of RTV sealant. G.E. 162 (P771-9003) is available through RCD in 3-oz. tubes.

12. Apply new sealant to flange of collector box and attach to cell panel using existing screws, making sure all screws are secure.
13. Reconnect wires to the following components. (Use connection diagram on wiring label, if wires were not marked for reconnection locations.):
    a. Draft safeguard switch.
    b. Inducer motor.
    c. Pressure switch(es).
    d. Limit over-temperature switch.
    e. Gas valve.
    f. Hot surface igniter.
    g. Flame-sensing electrode.
    h. Flame rollout switches.
14. Reinstall internal vent pipe, if applicable.

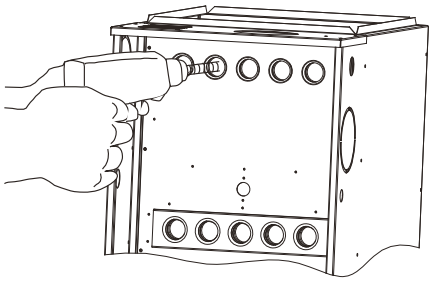

Fig. 14-3 Cleaning Heat Exchanger Cell

15. Reinstall vent connector on furnace vent elbow. Securely fasten vent connector to vent elbow with 2 field-supplied, corrosion-resistant, sheet metal screws located 1800 apart.
16. Replace blower access door only, if it was removed.
17. Set thermostat above room temperature and check furnace for proper operation.
18. Verify blower airflow and speed changes between heating and cooling.
19. Check for gas leaks.
20. Replace outer access door.

⚠ WARNING

FIRE OR EXPLOSION HAZARD

Failure to follow this warning could result in personal injury, death and/or property damage.
Never use a match or other open flame to check for gas leaks.
Use a soap-and-water solution.

21. Turn on electric power and gas supply to the furnace.
22. Check furnace for proper operation. Refer to "Operational Checks" section to verify burner flame characteristics.

14.7 Before Leaving An Installation

- Cycle the furnace with the thermostat at least three times.
  Verify cooling and fan only operation.
- Review the Owner's Manual with the homeowner and discuss proper furnace operation and maintenance.
- Leave literature packet near furnace.

14.8 Repair And Replacement Parts

- When ordering any of the listed functional parts, be sure to provide the furnace model, manufacturing, and serial numbers with the order.
- Although only functional parts are shown in the parts list, all sheet metal parts, doors, etc. may be ordered by description.
- Parts are available from your distributor. (See Fig . 14-4)

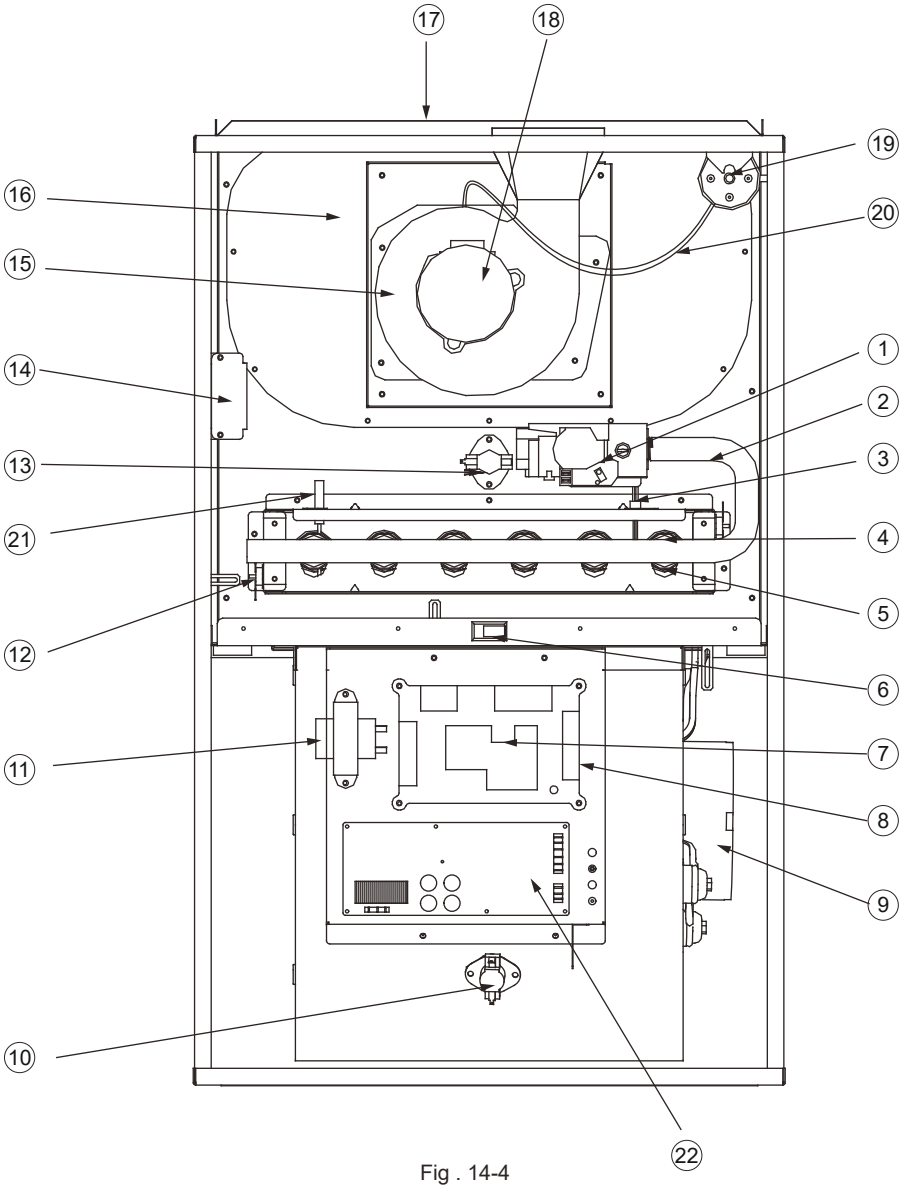

Fig . 14-4

COMPONENT IDENTIFICATION:

1	Gas Valve	12	Rollout Limit Switch
2	Gas Manifold	13	Primary Limit Switch
3	Ignition needle	14	Junction Box
4	Gas Orifice	15	Induced Draft Blower
5	Burner	16	Flue Collector Box
6	Door Switch	17	Heat Exchanger
7	Main control board assembly	18	Inducer
8	24 Volt Thermostat Connections	19	Pressure Switch
9	Blower Fan Motor	20	Pressure Switch Hose
10	Reverse flow switch	21	Flame Sensor
11	Transformer	22	Fan module board assembly

Please contact your local installer or dealer for replacement parts.

15 WIRING DIAGRAMS

WARNING

High Voltage:
Disconnecet all power before servicing or installing this unit. Multiple power sources may be present. Failure to do so may cause property damage,personal injury,or death.

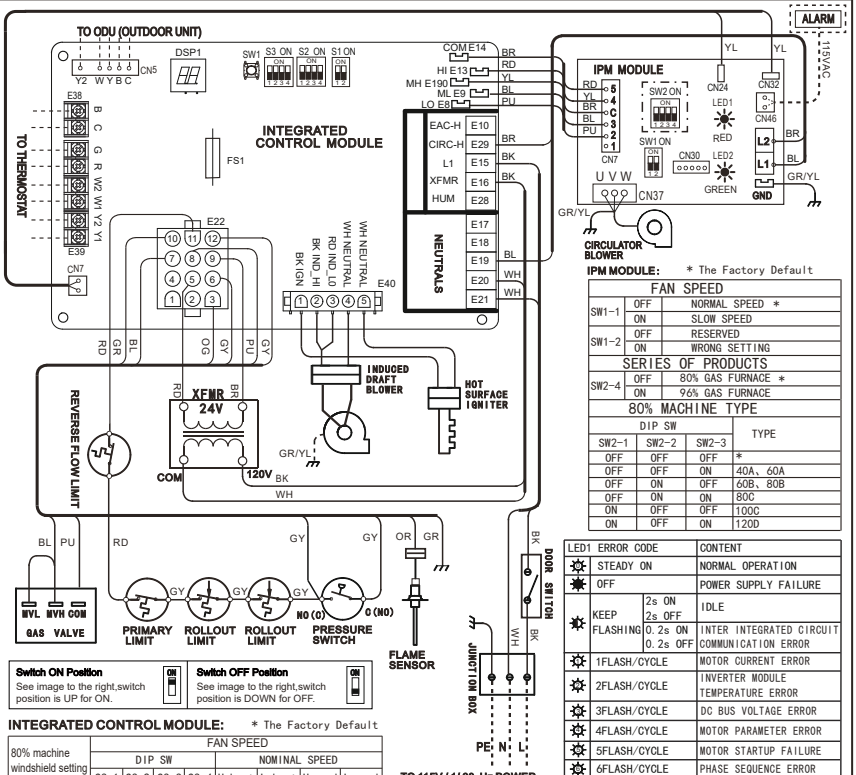

IPM MODULE: * The Factory Default

FAN SPEED		
SW1-1	OFF	NORMAL SPEED *
	ON	SLOW SPEED
SW1-2	OFF	RESERVED
	ON	WRONG SETTING
SERIES OF PRODUCTS		
SW2-4	OFF	80% GAS FURNACE *
	ON	96% GAS FURNACE

80% MACHINE TYPE			
DIP SW			TYPE
SW2-1	SW2-2	SW2-3	
OFF	OFF	OFF	*
OFF	OFF	ON	40A、60A
OFF	ON	OFF	60B、80B
OFF	ON	ON	80C
ON	OFF	OFF	100C
ON	OFF	ON	120D

LED1 ERROR CODE		CONTENT
STEADY ON		NORMAL OPERATION
OFF		POWER SUPPLY FAILURE
KEEP FLASHING	2s ON 2s OFF	IDLE
	0. 2s ON 0. 2s OFF	INTER INTEGRATED CIRCUIT COMMUNICATION ERROR
1FLASH/CYCLE		MOTOR CURRENT ERROR
2FLASH/CYCLE		INVERTER MODULE TEMPERATURE ERROR
3FLASH/CYCLE		DC BUS VOLTAGE ERROR
4FLASH/CYCLE		MOTOR PARAMETER ERROR
5FLASH/CYCLE		MOTOR STARTUP FAILURE
6FLASH/CYCLE		PHASE SEQUENCE ERROR

LED2 ERROR CODE	CONTENT
STEADY ON	NORMAL OPERATION
OFF	POWER SUPPLY FAILURE
6FLASH/CYCLE	NO MACHINE TYPE

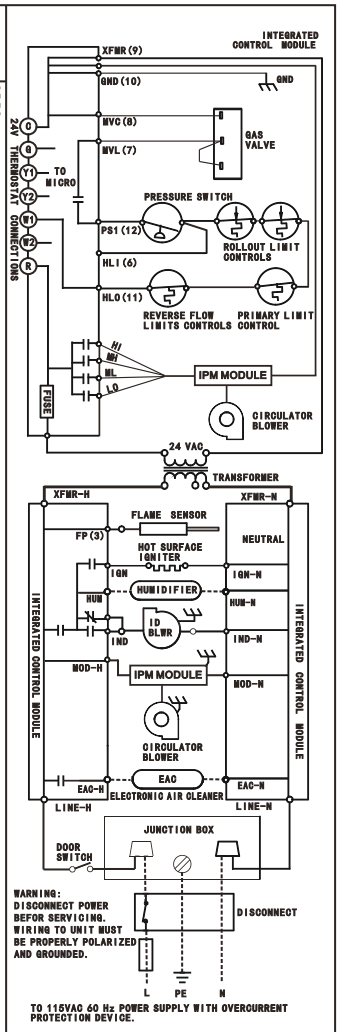

WARNING:
DISCONNECT POWER BEFOR SERVICING.
WIRING TO UNIT MUST BE PROPERLY POLARIZED AND GROUNDED.

Switch ON Position
See image to the right,switch position is UP for ON.

Switch OFF Position
See image to the right,switch position is DOWN for OFF.

INTEGRATED CONTROL MODULE: * The Factory Default

80% machine windshield setting	FAN SPEED							
	DIP SW				NOMINAL SPEED			
	S3-1	S3-2	S3-3	S3-4	H-heat	L-heat	H-cool	L-cool
100C/120D	* OFF	ON	OFF	OFF	4	3	3	2
	OFF	ON	ON	OFF	4	3	5	3
	OFF	ON	OFF	ON	5	4	4	4
	OFF	ON	OFF	ON	4	3	4	3
60A/80B/80C	* ON	OFF	OFF	ON	5	5	5	4
	OFF	ON	OFF	ON	4	3	4	3
	OFF	ON	OFF	OFF	4	3	3	2
	OFF	ON	OFF	OFF	4	3	3	2
60B	* OFF	ON	ON	OFF	4	3	5	3
	OFF	ON	ON	ON	5	4	4	4
	OFF	ON	OFF	ON	4	3	4	3
40A	* ON	OFF	ON	ON	5	3	5	4
	OFF	OFF	ON	OFF	4	2	3	2
	ON	ON	OFF	ON	4	2	4	3

W2 DELAY		
DIP SW		NOMINAL (MINUTES)
S1-1	S1-2	
OFF	OFF	*OFF
ON	OFF	10
OFF	ON	AUTO
ON	ON	20

HEAT OFF DELAY		
DIP SW		NOMINAL (SECONDS)
S2-1	S2-2	
OFF	OFF	*90
ON	OFF	120
OFF	ON	150
ON	ON	180

COOL OFF DELAY		
DIP SW		NOMINAL (SECONDS)
S2-3	S2-4	
OFF	OFF	*60
ON	OFF	90
OFF	ON	120
ON	ON	150

Error code

Error code	Meaning
E1	Shorted pressure switch
E2	Open pressure switch
E3	reserve
E4	Open Pressure Switch locked
E5	Open thermal limit,Rollout switch
E6	Open thermal limit,Rollout switch(Afer 5 times)
E7	Ignition failure locked
E8	Flame loss locked
FE	Gas valve relay stuck closed
FL	Flame low
Pr	Power reversed
Fo	Fuse open
bE	board error
nL	Signal error

Operation code

Code	Meaning
--	idle
H1	1st heat
H2	2nd heat (reserve)
CF	continuous fan
C1	1st cooling
C2	2nd cooling
dF	defrost

SW1 Error Query

After pressing the SW1 key, the digital LED display the last 10 times error code. When the key is pressed once, the digital LED display one error code. The digital LED display the last error code first.

YL	YELLOW	GY	GRAY
OR	ORANGE	RD	RED
PU	PURPLE		
GR	GREEN		
BK	BLACK		
BR	BROWN		
WH	WHITE		
BL	BLUE		

JUNCTION
TERMINAL
PLUG CONNECTION
EQUIPMENT GND
FIELD GND
FIELD SPLICE
FIELD INSTALLED

SWITCH (TEMP.)
IGNITER
SWITCH (PRESS.)
OVERCURRENT PROT. DEVICE
KEY
FACTORY OPTIONAL

NOTE:

1. SET HEAT ANTICIPATOR ON ROOM THERMOSTAT AT 0.7 AMPS.
2. MANUFACTURER'S SPECIFIED REPLACEMENT PARTS MUST BE USED WHEN SERVICING.
3. IF ANY OF THE ORIGINAL WIRE AS SUPPLIED WITH THE FURNACE MUST BE REPLACED, IT MUST BE REPLACED WITH WIRING MATERIAL HAVING A TEMPERATURE RATING OF AT LEAST 105℃. USE COPPER CONDUCTORS ONLY.
4. BLOWER SPEEDS SHOULD BE ADJUSTED BY INSTALLER TO MATCH THE INSTALLATION REQUIREMENTS SO AS TO PROVIDE THE CORRECT COOLING CFM. (SEE SPEC SHEET FOR AIR FLOW CHART)
5. UNIT MUST BE PERMANENTLY GROUNDED AND CONFORM TO N.E.C. AND LOCAL CODES.

TwentyThreeC, LLC
800 Beaty Street,
Davidson,NC, 28036
www.oxboxhvac.com

For more information contact
your local dealer (distributor)

Since the manufacturer has a policy of continuous product and product data improvement, it reserves the right to change the design and specification without notice.

ⓒ. 2019 TwentyThreeC, LLC

*** V1.0