INSTALLATION AND OPERATION MANUAL

Upflow/Downflow Cased Coils with Leak Mitigation Kit
Cooling and Heat Pump Compatible
Factory Installed R454B Refrigerant Leakage Sensor

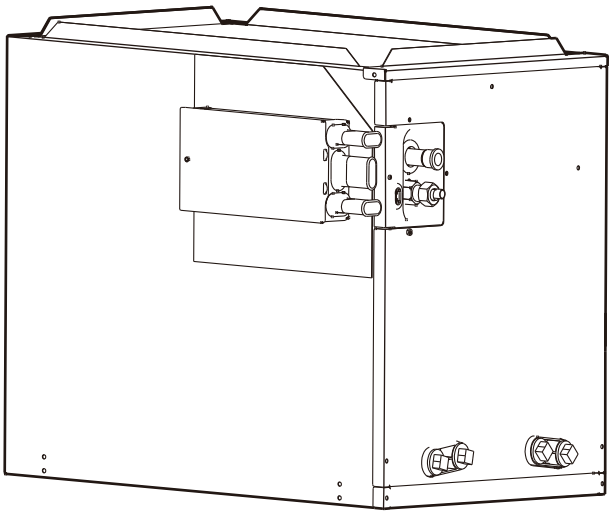

Please read this manual carefully and keep it for future reference.
All the pictures in this manual are for illustrations purpose only.

RECOGNIZE THIS SYMBOL AS AN INDICATION OF IMPORTANT SAFETY INFORMATION

⚠ WARNING

These instructions are intended as an aid to qualified licensed service personnel for proper installation, adjustment and operation of this unit. Read these instructions thoroughly before attempting installation or operation. Failure to follow these instruction may result in improper installation, adjustment, service or maintenance, which could possibly lead to fire, electrical shock, property damage, personal injury or even death.

⚠ WARNING

This appliance is not intended for use by people (including children) with reduced physical, sensory or mental capabilities, or lack of experience and knowledge, unless they have been given supervision or instruction concerning use of the appliance by a person responsible for their safety.
Children should be supervised to ensure that they do not play with the appliance.

⚠ WARNING

Proposition 65: This appliance contains fiberglass insulation. Respirable particles of fiberglass are known to the state of California to cause cancer. For more information, go to www.P65Warnings.ca.gov."

CONTENTS

1 SAFETY
- 1.1 Safety Signs 01
- 1.2 Safety Precautions 02

2 ABOUT THE PRODUCT
- 2.1 Unit Dimensions 07
- 2.2 Codes & Regulations 08
- 2.3 Inspection upon Unit Arrival 08
- 2.4 Clearances 08
- 2.5 Refrigerant Sensor 09

3 INSTALLATION
- 3.1 Replacement Parts 09
- 3.2 Pre-installation Instruction 09
- 3.3 Installation and Trap Connection 10
- 3.4 Installation of Refrigerant Sensor 10
- 3.5 Refrigerant Charge and Room Area Limitations 11
- 3.6 Installation of the R454B Leak Mitigation Kit 13

4 PISTION/TXV INSTALLATION
- 4.1 Piston Installation 18
- 4.2 Optional TXV Kit Installation 19

5 REFRIGERANT LINE 20

6 DUCTWORK 21

7 AIR FLOW PERFORMANCE 22

8 DRAIN APPLICATION
- 8.1 Condensate Drain Piping 23
- 8.2 Drain Pan Installation 23

9 DISPOSAL 23

This document is customer property and is to remain with this unit.
These instructions do not cover all the different variations, nor do do they provide for every possible contingency to be met in connection with installation.
All phases of this installation must comply with national state and local codes. If additional information is required, please contact your local distributor.

1 SAFETY

1.1 Safety Signs

This is the general warning sign. It is used to alert the user to potential hazards. All safety messages that follow this sign shall be obeyed to avoid possible harm.

⚠ DANGER

Indicates a hazard with a high level of risk which, if not avoided, will result in death or serious injury.

⚠ WARNING

Indicates a hazard with a medium level of risk which, if not avoided, could result in death or serious injury.

⚠ CAUTION

Indicates a hazard with a low level of risk which, if not avoided, could result in minor or moderate injury.

NOTE

A situation that may cause damage to the equipment or loss of property.

Explanation of symbols displayed on the unit

A2L R454B	**DANGER**	This symbol shows that this appliance uses a mildly flammable refrigerant. If the refrigerant leaks and is exposed to an ignition source, there is a risk of fire.
≥ A m²	**WARNING**	This symbol shows that appliance shall be installed, operated and stored in a room with a floor area not less than the minimum room area.
	CAUTION	This symbol shows that the operation manual should be read carefully.
	CAUTION	This symbol shows that a service personnel should be handling this equipment with reference to the installation manual.
i	**CAUTION**	This symbol shows that information is available such as in the operating manual or installation manual.

1.2 Safety Precautions

⚠ DANGER

Disconnect all power to unit before installing or servicing. More than one disconnect switch may be required to de-energize the equipment. Hazardous voltage can cause severe personal injury or death.

⚠ WARNING

If removal of the blower assembly is required, all disconnect switches supplying power to the equipment must be de-energized and locked (if not in sight of unit), so the field power wires can be safely removed from the blower assembly. Failure to do so may cause electrical shock, resulting in personal injury or death.

⚠ WARNING

The unit must be permanently grounded. Failure to do so may result in electrical shock, causing personal injury or death.

⚠ WARNING

Because of possible damage to equipment or personal injury, installation, service, and maintenance should be performed by a trained, qualified service personnel. Consumer service is recommended only for filter cleaning/ replacement. Never operate the unit with the access panels removed.

⚠ WARNING

These instructions are intended as an aid to qualified, licensed service personnel for proper installation, adjustment and operation of this unit. Read these instructions thoroughly before attempting installation or operation. Failure to follow these instructions may result in improper installation, adjustment, service or maintenance, possibly resulting in fire, electrical shock, property damage, personal injury or death.

⚠ WARNING

PROPOSITION 65: This appliance contains fiberglass insulation. Respirable particles of fiberglass are known to the State of California to cause cancer.

All manufacturer products meet current federal OSHA Guidelines for safety. California Proposition 65 warnings are required for certain products, which are not covered by the OSHA standards.

California's Proposition 65 requires warnings for products sold in California that contain or produce any of over 600 listed chemicals known to the State of California to cause cancer or birth defects such as fiberglass insulation, lead in brass, and combustion products from natural vapor.

All "new equipment" shipped for sale in California will have labels stating that the product contains and/or produces Proposition 65 chemicals. Although we have not changed our processes, having the same label on all our products facilitates manufacturing and shipping. We cannot always know "when, or if" products will be sold in the California market.

You may receive inquiries from customers about chemicals found in, or produced by, some of our heating and air-conditioning equipment, or found in natural vapor used with some of our products. Listed below are those chemicals and substances commonly associated with similar equipment in our industry and other manufacturers.

Glass Wool (Fiberglass) Insulation
Carbon Monoxide (CO)
Formaldehyde
Benzene

More details are available on the following websites: OSHA (Occupational Safety and Health Administration), at www.osha.gov and the State of California's OEHHA (Office of Environmental Health Hazard Assessment), at www.oehha.org. Consumer education is important since the chemicals and substances on the list are found in our daily lives. Most consumers are aware that products present safety and health risks, when improperly used, handled and maintained.

⚠ WARNING

The first 6 inches of supply air plenum and ductwork must be constructed of sheet metal as required by NFPA 90B. The supply air plenum or duct must have a solid sheet metal bottom directly under the unit with no openings, registers or flexible air ducts located in it. If flexible supply air ducts are used, they may be located only in the vertical walls of the rectangular plenum, at a minimum of 6 inches from the solid bottom. Metal plenum of duct may be connected to the combustible floor base, if not, it must be connected to the unit supply duct exposed to the supply air opening from the downflow unit. Exposing combustible (non-metal) material to the supply opening of a downflow unit can cause a fire resulting in property damage, personal injury or death.

⚠ WARNING

Only use this unit in a well-ventilated area and ensure unit's airflow inlet and outlet would not be impeded by obstructions. Do not use this unit in the following locations:

Locations with mineral oil.

Locations with saline atmospheres, such as seaside locations.

Locations with sulphurous atmospheres, such as near natural hot springs.

Where high voltage electricity is present, such as in certain industrial locations.

On vehicles or vessels, such as trucks or ferry boats.

Where exposure to oily or very humid air may occur, such as kitchens.

In proximity to sources of electromagnetic radiation, such as high-frequency transmitters or other high strength radiation devices.

⚠ WARNING

Do not use means to accelerate the defrosting process or to clean, other than those recommended by the manufacturer.

The appliance shall be stored in a room that does not have continuously operating ignition sources (for example: open flames, an operating gas appliance or an operating electric heater).

Do not pierce or burn the unit.

Be aware that refrigerants may not contain an odour.

If refrigerant gas leaks during installation, ventilate the area immediately.

Comply with national gas regulations.

⚠ WARNING

This appliance is not intended for use by people (including children) with reduced physical, sensory or mental capabilities, or people who lack experience and knowledge, unless they are supervised or have been given instructions concerning the use of the appliance by a person responsible for their safety.

Children should be supervised to ensure that they do not play with the appliance.

Any person who is involved with working on or opening a refrigerant circuit should hold a current valid certificate from an industry-accredited assessment authority, which authorizes their competence to handle refrigerants safely in accordance with an industry recognized assessment credential.

Servicing shall only be performed performed by licensed and qualified HVAC service personnel.

Maintenance and repair requiring the assistance of other skilled personnel shall be carried out under the supervision of a person competent in the use of flammable refrigerants.

Prior to beginning work on systems containing flammable refrigerants, safety checks are necessary to minimize the risk of ignition.

⚠ WARNING

When repairing the refrigerating system, comply with the following precautions prior to conducting work on the system:

– The work shall be undertaken according to controlled procedures to minimize the risk of the presence of flammable gases or vapors during the work.

– All maintenance staff and others working in the local area shall be instructed on the nature of work being carried out. Work in confined spaces shall be avoided.

– The area shall be checked with an appropriate refrigerant detector prior to and during work, to ensure the technician is aware of potentially toxic or flammable environment. Ensure that the leak detection equipment being used is suitable for use with all applicable refrigerants, i.e. non-sparking, adequately sealed or intrinsically safe.

– If any brazing is to be conducted on the refrigerating equipment or any associated parts, appropriate fire extinguishing equipment shall be available and easily accessible. Have a dry powder or CO2 fire extinguisher adjacent to the charging area.

– When carrying out work in relation to a refrigerating system that involves exposing any pipe work, no sources of ignition shall be used in such a manner that it may lead to the risk of fire or explosion. All possible ignition sources, including cigarette smoking, should be kept sufficiently far away from the site of installation, repair, or removal and disposal of the unit, during which refrigerant can possibly be released into the surrounding space. Prior to beginning work, the area around the equipment is to be surveyed to make sure that there are no flammable hazards or ignition risks. “No Smoking” signs shall be clearly displayed.

Ensure that the area is in the open or that it is adequately ventilated before opening the system or conducting any hot work. A degree of ventilation shall continue during the period that the work is carried out. The ventilation should safely disperse any released refrigerant and preferably expel it externally into the surroundings.

Where electrical components are being changed, they shall be fit according to their purpose and to the correct specification. At all times the manufacturer’s maintenance and service guidelines shall be followed. If in doubt, consult the manufacturer’s technical department for assistance. The following checks shall be applied to installations using flammable refrigerants:

– The actual refrigerant charge is in accordance with the room size within which the refrigerant containing parts are installed;

– The ventilation machinery and outlets are operating adequately and are not obstructed.

– If an indirect refrigerating circuit is being used, the secondary circuit shall be checked for the presence of refrigerant.

– Equipment marking must remain visible and legible. Markings and signs that are illegible shall be corrected.

Refrigerant pipe or components are installed in a position where they are unlikely to be exposed to any substances which may corrode refrigerant containing components, unless the components are constructed of materials that are inherently resistant to corrosion or are suitably protected against corrosion.

Repair and maintenance of electrical components shall include initial safety checks and component inspection procedures. If a fault exists that could compromise safety, then no electrical supply shall be connected to the circuit until the fault has been dealt with satisfactorily.

If the fault cannot be corrected immediately but it is necessary to continue operation, an adequate temporary solution shall be used. This shall be reported to the owner of the equipment so that all parties are advised. Initial safety checks shall include:

– That capacitors are discharged: this shall be done in a safe manner to avoid the possibility of sparking;

– That no live electrical components and wiring are exposed while charging, recovering or purging the system;

– That there is continuity of grounding.

⚠ WARNING

Sealed electrical components shall be replaced.

Intrinsically safe components shall be replaced and not repaired.

Check that cabling will not be subject to wear, corrosion, excessive pressure, vibration, sharp edges or any other adverse environmental effects. The check shall also take into account the effects of aging or continual vibration from sources such as compressors or fans.

Under no circumstances shall potential sources of ignition be used while searching for or detecting of refrigerant leaks. A halide torch (or any other detector using a naked flame) shall not be used.

Electronic leak detectors may be used to detect refrigerant leaks but, in the case of flammable refrigerants, the sensitivity may not be adequate, or may need re-calibration. (Detection equipment shall be calibrated in a refrigerant-free area.) Ensure that the detector is not a potential source of ignition and is suitable for the refrigerant used. Leak detection equipment shall be set at a percentage of the LFL of the refrigerant and shall be calibrated for the refrigerant employed, and the appropriate percentage of gas (25 % maximum) is confirmed.

If a leak is suspected, all naked flames shall be removed/extinguished.

If a leakage of refrigerant which requires brazing is found, all of the refrigerant shall be recovered from the system, or isolated(by means of shut off valves) in a part of the system remote from the leak.

Leak detection fluids are also suitable for use with most refrigerants but the use of detergents containing chlorine shall be avoided as the chlorine may react with the refrigerant and corrode the copper pipe-work.

NOTE: Examples of leak detection fluids are

-bubble method,

-A2L Compliant Leak Detector.

When breaking into the refrigerant circuit to make repairs - or for any other purpose -conventional procedures shall be used. However, for flammable refrigerants it is important that best practice be followed, since flammability is a consideration. The following procedure shall be adhered to:
- safely remove refrigerant following local and national regulations
- evacuate
-purge the circuit with inert gas
- evacuate
- continuously flush or purge with inert gas when using flame to open circuit, and
- open the circuit

The refrigerant charge shall be recovered into the correct recovery cylinders if venting is not allowed by local and national codes. For appliances containing flammable refrigerants, the system shall be purged with oxygen-free nitrogen to render the appliance safe for flammable refrigerants. This process might need to be repeated several times. Compressed air or oxygen shall not be used for purging refrigerant systems.

For appliances containing flammable refrigerants, refrigerant purging shall be accomplished by breaking the vacuum in the system with oxygen-free nitrogen and continuing to fill it until the desired working pressure is reached. Afterwards, the system should be vented to the atmosphere and then pulled down to a vacuum. This process shall be repeated until no refrigerant is within the system. When the final oxygen-free nitrogen charge is used, the system shall be vented down to atmospheric pressure to enable work to take place.

The outlet for the vacuum pump shall not be close to any potential ignition sources, and ventilation shall be available.

Ensure that contamination of different refrigerants does not occur when using charging equipment. Hoses or lines shall be as short as possible to minimize the amount of refrigerant they contain.

When use a refrigerant tank with siphon to add refrigerant, the refrigerant tank should be placed upright. When use a refrigerant tank without siphon to add refrigerant, the refrigerant tank should be placed upside down. Ensure that the refrigeration system is grounded prior to charging the system with refrigerant.

Label the system when charging is complete (if it is not already labeled).
Take extreme care not to overfill the refrigeration system.

Prior to recharging the system, it shall be pressure-tested with the appropriate purging gas. The system shall be leak-tested on completion of charging but prior to commissioning. A follow up leak test shall be carried out prior to leaving the site.

Before carrying out this procedure, it is essential that the technician is completely familiar with the equipment and all its detail. It is recommended that all refrigerants are recovered safely. Prior to the task being carried out, an oil and refrigerant sample shall be taken in case analysis is required prior to re-use of reclaimed refrigerant. It is essential that electrical power is available before the task is commenced.

a) Become familiar with the equipment and its operation.

b) Isolate system electrically.

c) Before attempting the procedure ensure that:

– mechanical handling equipment is available, if required, for handling refrigerant cylinders;

– all personal protective equipment is available and used correctly;

– the recovery process is supervised at all times by a competent person;

– recovery equipment and cylinders conform to the appropriate standards.

d) Pump down refrigerant system, if possible.

e) If a vacuum is not possible, make a manifold so that refrigerant can be removed from various parts of the system.

f) Make sure that the cylinder is situated on the scales before recovery takes place.

g) Start the recovery machine and operate it in accordance with the manufacturer's instructions.

h) Do not overfill cylinders. (No more than 80 % volume liquid charge).

i) Do not exceed the maximum working pressure of the cylinder, even temporarily.

j) When the cylinders have been filled correctly and the process has been completed, make sure that the cylinders and the equipment are removed from site promptly and all isolation valves on the equipment are closed off.

k) Recovered refrigerant shall not be charged into another refrigeration system unless it has been cleaned and checked.

Equipment shall be labeled stating that it has been de-commissioned and emptied of refrigerant. The label shall be dated and signed. Ensure that there are labels on the equipment stating that the equipment contains flammable refrigerant.

When removing refrigerant from a system, either for servicing or decommissioning, it is recommended that all refrigerants are removed safely.

When transferring refrigerant into cylinders, ensure that only appropriate refrigerant recovery cylinders are employed. Ensure that the correct number of cylinders for holding the total system charge is available. All cylinders to be used are designated for the recovered refrigerant and labelled for that refrigerant (i.e.special cylinders for the recovery of refrigerant). Cylinders shall be complete with pressure-relief valve and associated shut-off valves in good working order. Empty recovery cylinders are evacuated and, if possible, cooled before recovery occurs.

The recovery equipment must be in good working and come with a set of instructions for proper usage. Futhermore, the equipment should be suitable for safely recovering flammable refrigerants. If in doubt, the manufacturer should be consulted. In addition, a set of calibrated weighing scales shall be available and in good working order. Hoses shall be complete with leak-free disconnect couplings and in good condition.

The recovered refrigerant shall be processed according to local legislation in the correct recovery cylinder, and the relevant waste transfer note arranged. Do not mix refrigerants in recovery units and especially not in cylinders.

If compressors or compressor oils are to be removed, ensure that they have been evacuated to an acceptable level to be certain that flammable refrigerant does not remain within the lubricant. The compressor body shall not be heated by an open flame or other ignition sources to accelerate this process. When oil is drained from a system, it shall be carried out safely.

Do not use the air conditioner for other purposes. In order to avoid any quality deterioration, do not use the unit for the cooling of precision instruments, food, plants, animals or works of art. Before cleaning, be sure to stop the operation, turn the breaker off or unplug the supply cord. Otherwise, electric shock and injury may occur.

In order to avoid electric shock or fire, make sure that an ground leak detector is installed.

Never put any objects into the air inlet or outlet.

Never inspect or service the unit by yourself.

Ask a qualified service person to perform this task.

Do not dispose of this product as unsorted municipal waste. This waste should be collected separately for special treatment. Do not dispose of electrical appliances as unsorted municipal waste. Use separate collection facilities. Contact your local government for information regarding the connection systems available.

If electrical appliances are disposed of in landfills or dumps, hazardous substances can leak into the groundwater and get into the food chain, harming your health and well-being.

To prevent refrigerant leak, contact your dealer.

When the system is installed and operated in a small room, it is required to maintain the concentration of the refrigerant below the limit, in case a leak occurs. Otherwise, oxygen in the room may be affected, resulting in a serious accident.

The refrigerant in the air conditioner is safe and normally does not leak.

If the refrigerant leaks into the room and comes into contact with the fire of a burner, a heater or a cooker, a harmful gas could be released.

Turn off any combustible heating devices, ventilate the room, and contact from whom you purchased the unit.

Do not use the air conditioner until a service person confirms that the refrigerant leak is repaired.

Keep ventilation openings clear of obstruction.

⚠ CAUTION

Be sure the air conditioner is grounded.
In order to avoid electric shock, make sure that the unit is grounded and that the ground wire is not connected to a gas or water pipe, lightning conductor or telephone ground wire.

Do not operate the air conditioner with wet hands.An electric shock may happen.

Do not touch the heat exchanger fins. These fins are sharp and could cut you.

To avoid oxygen deficiency, ventilate the room sufficiently if equipment with a burner is used together with the air conditioner.

Arrange the drain hose to ensure smooth drainage. Incomplete drainage may cause wetting of the building, furniture, etc.

Never touch the internal parts of the controller.

Do not remove the blower access panel. Some parts inside are dangerous to touch, and machine issues may occur.

Attention is drawn to the fact that additional transportation regulations may exist with respect to the equipment containing a flammable gas. The maximum number of pieces of equipment or the configuration of the equipment permitted to be transported together will be determined by the applicable transport regulations.

Signs for similar appliances used in a work area are generally addressed by local regulations and give the minimum requirements for the provision of safety and/or health signs for a work location.

All required signs are to be maintained and employers should ensure that employees receive suitable and sufficient instruction and training on the meaning of appropriate safety signs and the actions that need to be taken in connection with these signs.

The effectiveness of signs should not be diminished by too many signs being placed together.

Any pictograms used should be as simple as possible and contain only essential details.

The storage of the appliance should be in accordance with the applicable regulations or instructions, whichever is more stringent.

Storage package protection should be constructed such a way that mechanical damage to the equipment inside the package will not cause a leak of the refrigerant charge.

The maximum number of pieces of equipment permitted to be stored together will be determined by local regulations.

Do not operate the air conditioner when using a room fumigation - type insecticide. Failure to observe this precaution could cause the chemicals to become deposited in the unit, which could endanger the health of those who are hypersensitive to chemicals. It may also cause the refrigerant sensor to alarm.

The appliance uses R454B refrigerant.

NOTE

If this unit is used together with furnaces or other device, shall be evaluated in the end product.

2 ABOUT THE PRODUCT

The coil can be positioned for bottom return air in the upflow and horizontal right applications. It must be positioned for top return when in downflow and horizontal left applications. See figure 2-1. For furnace applications, the coil must be installed downstream (in the air outlet) of the furnace

NOTE

This coil comes with a factory-installed heat shield on the drain pan.

NOTE

The leak mitigation system is required to be used with these coils.

2.1 Unit Dimensions

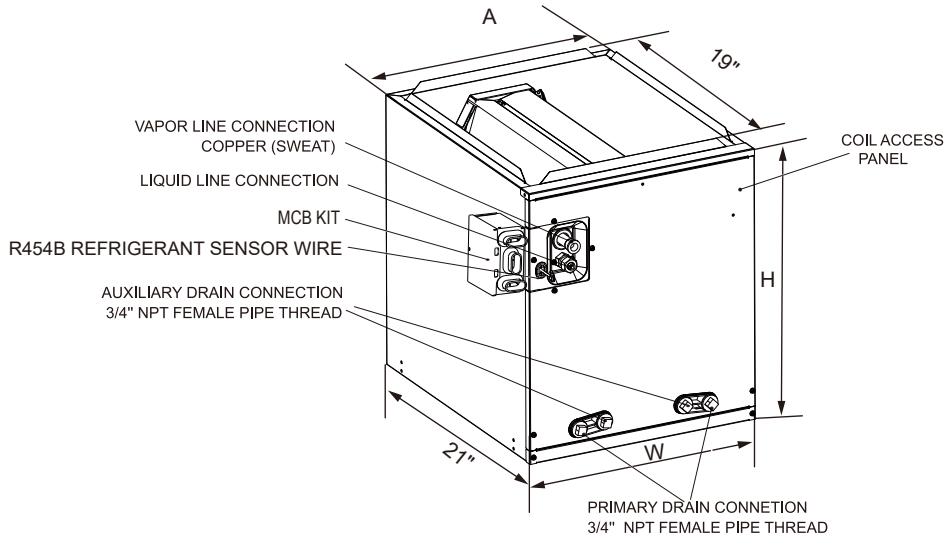

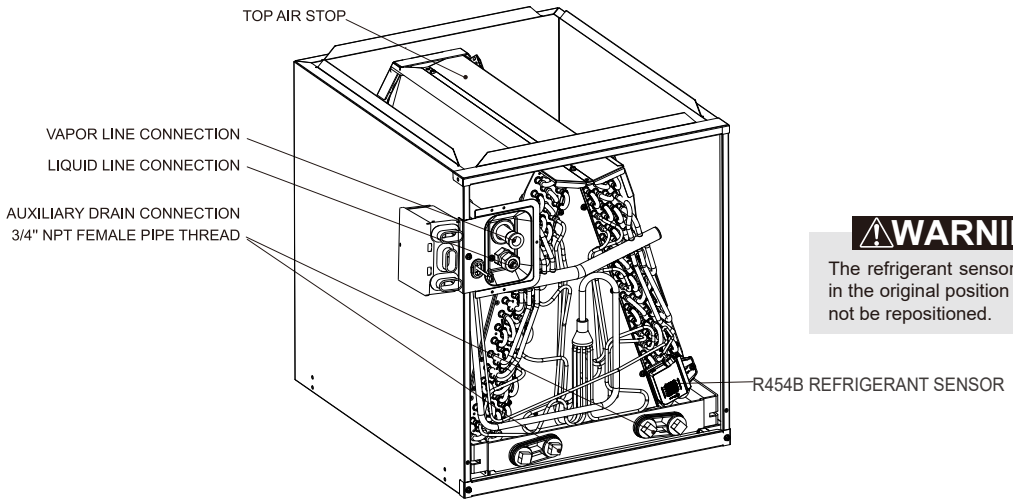

WARNING

The refrigerant sensor must be in the original position and shall not be repositioned.

Fig. 2-1 CASED DIMENSIONS AND COMPONENT LOCATION

DIMENSIONAL DATA

MODELS	Unit Dimensions				WEIGHT (lb [kg])
	UNIT HEIGHT "H" (in [mm])	UNIT WIDTH "W" (in [mm])	SUPPLY DUCT "A" (in [mm])	LIQUID LINE/ VAPOR LINE	
J5GXCA003AC6HUA	20"[508]	14-1/2"[368]	13"[330]	3/8" / 3/4"	42[19]
J5GXCB004AC6HUA	20"[508]	17-1/2"[445]	16"[407]	3/8" / 3/4"	44[20]
J5GXCC005AC6HUA	20"[508]	21"[533]	19-1/2"[495]	3/8" / 3/4"	46[21]

Table 2-1

2.2 Codes & Regulations

This product is designed and manufactured to comply with national codes.

Installation in accordance with such codes and/or prevailing local codes/regulations is the responsibility of the installer. The manufacturer assumes no responsibility for equipment installed in violation of any codes or regulations.

The United States Environmental Protection Agency(EPA) has issued various regulations regarding the introduction and disposal of refrigerants. Failure to follow these regulations may harm the environment and can lead to the imposition of substantial fines. Should you have any questions please contact the local office of the EPA.

2.3 Inspection upon Unit Arrival

As soon as unit is received, it should be inspected and noted for possible shipping damage during transportation. It is the carrier's responsibility to cover the cost of shipping damage. Manufacturer or distributor will not accept a claim from contractors for any transportation damage.

2.4 Clearances

Following clearances should be provided during installation
a.Maintenance and service access, including coil cleaning and coil assembly removal
b.Refrigerant piping and connections
c.Condensate drain line

To ensure the proper installation, it is important to Select a solid and level site.

Ensure that there is enough space required for installation and maintenance.

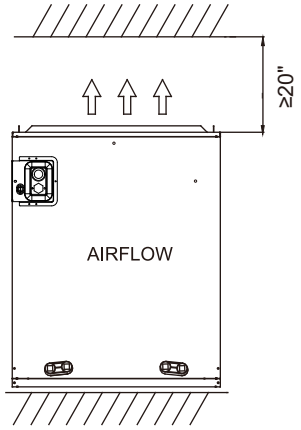

Fig. 2-2 Front view of the indoor unit clearance (including air duct)

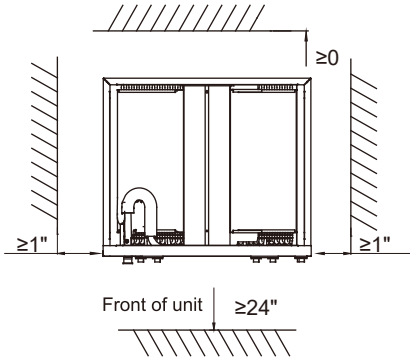

Fig. 2-3 Top View of the indoor unit clearance (including air duct)

2.5 Refrigerant Sensor

R454B refrigerant leakage sensor is pre-configured on the coil from the factory. It is located in the bottom right corner of the coil to meet different installation scenarios. To meet different installation scenarios, the refrigerant sensor is located in the bottom right corner of the coil. Before installing the indoor unit, check whether the refrigerant sensor is correctly installed according to Section 3.

⚠ CAUTION

The refrigerant leakage sensor can only use the factory model or the specified model indicated in the corresponding manual.

The R454B refrigerant leakage sensor must be used to activate the refrigerant shut-off device, the alarm device, incorporated circulation airflow or other emergency controls, which shall give an electrical signal at a predetermined alarm set point in response to leaked refrigerant.

The location of leakage sensors shall be chosen in relation to the different installation scenarios. Please refer to the indoor unit installation manual for specific requirements.

The installation of the refrigerant leakage sensor shall allow access for checking, repair or replacement by an authorized person.

The refrigerant leakage sensor shall be installed so its function can be verified easily.

The refrigerant leakage sensor shall be protected to prevent tampering or unauthorized resetting of the pre-set value.

To be effective, the refrigerant leakage sensor must be electrically powered at all times after installation, other than when servicing.

If the refrigerant leakage sensor detects a refrigerant leak, several actions will occur: the fan will be turned on to the maximum, and the compressor will stop running,furnace heating will cut off.In such a situation,it is crucial for your safety that you immediately evacuate the area where the leak occured.Afterward, it is recommended to notify a professional to handle the situation appropriately.

The service life of the refrigerant sensor is 15 years, and it should be replaced after the service life.

⚠ WARNING

LEAK DETECTION SYSTEM installed on indoor unit, unit must be powered except for service.

NOTE

R454B refrigerant leakage sensor is configured for the indoor unit, and the operation of fan can be initiated by R454B refrigerant sensor, meeting the incorporated circulation airflow requirements. The allowed maximum refrigerant charge (Mmax) and the required minimum room area (Amin) can be determined according to Table 3-2 and Table 3-3.

3 INSTALLATION

3.1 Replacement Parts

Contact your distributor for authorized replacement parts.

3.2 Pre-installation Instruction

Carefully read all instructions for installation prior to installation product. Make sure each step or procedure is understood and any special considerations are taken into account before starting installation. Assemble all tools, hardware and supplies needed to complete the installation. Some items may need to be purchased locally.

Make sure everything needed to install the product is on hand before starting.

Do not install unit in an area where flammable materials are present due to the risk of an explosion resulting in serious injury or death.

⚠ WARNING

These instructions are exclusively intended for qualified contractors and authorized installers. Work on the refrigerant circuit with flammable refrigerant in safety group A2L may only be carried out by authorized contractors. Only qualified personnel should install and service the equipment. The installation, start up, and servicing of HVAC equipment can be hazardous and requires specific knowledge and training. Observe all precautions in the literature as well as on the tags and labels.
Work on electrical equipment may only be carried out by a qualified electrician.
Before initial commissioning, all safety – related points must be checked by the particular certified heating contractors. The system must be commissioned by the system installer or a qualified person authorized by the installer.
For installation of the indoor unit, refer to the corresponding installation and operation manual.
If an indoor unit is installed in an unventilated area, the area shall be so constructed that should any refrigerant leak, it will not stagnate so as to create a fire or explosion hazard.
The appliance shall be stored so as to prevent mechanical damage from occurring.
Do not stack combustible materials on the surface of the indoor unit.

⚠ WARNING

Ensure that apparatus is mounted securely.

⚠ WARNING

Assure that PARTIAL UNITS shall only be connected to an appliance suitable for the same refrigerant.
This unit is a PARTIAL UNIT AIR CONDITIONER, complying with PARTIAL UNIT requirements of this Standard, and must only be connected to other units that have been confirmed as complying to corresponding PARTIAL UNIT requirements of this Standard, UL 60335-2-40/CSA C22.2 No. 60335-2-40, or UL 1995/CSA C22.2 No 236.
This unit is evaluated as a component of the EVAPORATOR UNIT, and the EVAPORATOR UNIT is a partial unit.

3.3 Installation and Trap Connection

1. See Fig. 3-1 for coil installation and drain connection.
2. Installation notes:

A. Shut off or disconnect gas furnace's power and remove gas pipe if necessary.
B. Disconnect and remove a sufficient portion of the supply ductwork to provide clearance for the cased coil.
C. Ensure that the coil is leveled well and seal the gap between coil and furnace. See Fig. 3-1. In case that coil and furnace sizes are not matched, use proper size of sheet metal or other material to fill the gap and seal the gap to prevent air leak.
D. Reconnect the ductwork to the coil case, and seal any leakage.
E. Reconnect Power line on gas furnace, turn on the furnace to check any sign of leakage.
F. The installation method shall refer to the requirements of gas furnaces and on site installation conditions.

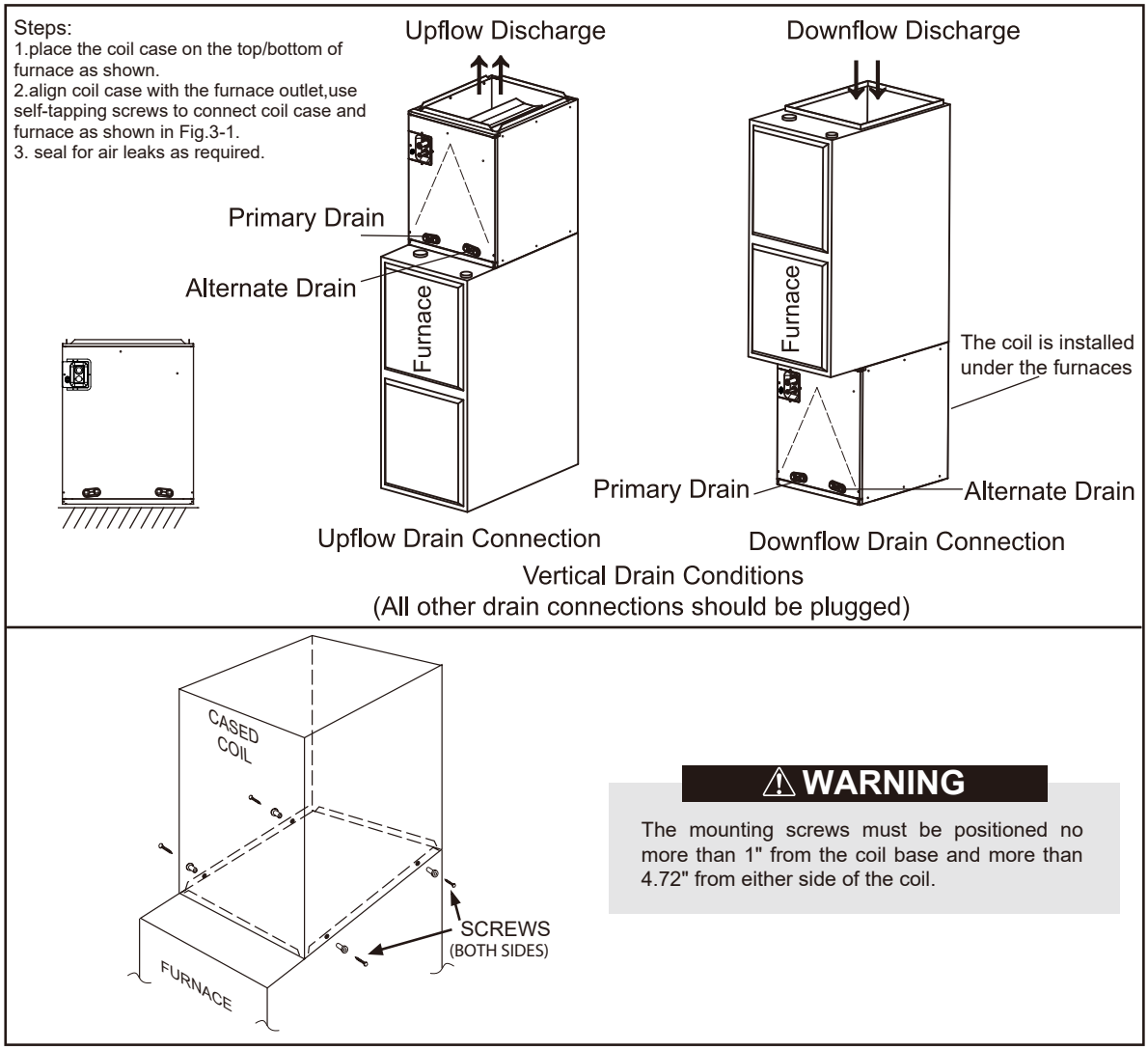

Fig. 3-1 INSTALLATION OF CASED COIL

⚠ WARNING

Only qualified installers/technicians should attach coil to furnace/ductwork, failure to follow instructions properly could result in a screw damaging either the coil or drain-pan and could void the warranty.

3.4 Installation of Refrigerant Sensor

The wire of the refrigerant sensor must be connected to the leak mitigation control kit. For specific operation instructions, please refer to the Wiring diagrams and explanatory label of the leak mitigation control kit.

⚠ WARNING

When using a gas furnace for heating, ensure that the furnace discharge air temperature does not exceed 200 ℉. Exceeding this temperature may cause the refrigerant leak sensor to malfunction, which can lead to a hazardous situation.

3.5 Refrigerant Charge and Room Area Limitations

In UL/CSA 60335-2-40, R454B refrigerant is classified as class A2L, which is mildly flammable. Therefore, R454B refrigerant is suitable for systems needing additional refrigerant charge and which will limit the area of the rooms being served by the system.

Similarly, the total amount of refrigerant in the system shall be less than or equal to the allowable maximum refrigerant charge. The allowable maximum refrigerant charge depends on the area of the rooms being served by the system.

NOTE

The nouns in this section are explained as follows:
Mc: The actual refrigerant charge in the system.
A: the actual room area where the appliance is installed.
Amin: The required minimum room area.
Mmax:The allowable maximum refrigerant charge in a room.
Qmin : The minimum circulation airflow.
Anvmin: The minimum opening area for connected rooms.
TAmin: The total area of the conditioned space (For appliances serving one or more rooms with an air dut system).
TA: The total area of the conditioned space connected by air ducts.

⚠ CAUTION

The space considered shall be any space which contains refrigerant-containing parts or into which refrigerant could be released.
The room area (A) of the smallest, enclosed, occupied space shall be used in the determination of the refrigerant quantity limits.

For determination of room area (A) when used to calculate the refrigerant charge limit, the following shall apply.
The room area (A) shall be defined as the room area enclosed by the projection to the base of the walls, partitions and doors of the space in which the appliance is installed.
Spaces connected by only drop ceilings, ductwork, or similar connections shall not be considered a single space.

3.5.1. The allowed maximum refrigerant charge and required minimum room area

NOTE

There is no fan inside the A-Coil, the air volume should be evaluated when installed with an air handling unit.

If the fan incorporated to an appliance is continuously operated or operation is initiated by a REFRIGERANT DETECTION SYSTEM with a sufficient CIRCULATION AIRFLOW rate, the allowable maximum refrigerant charge (Mmax) and the required minimum room area (Amin/TAmin) is shown in Table 3-1 and Table 3-2.

The allowable maximum refrigerant charge

A/TA		Mmax		A/TA		Mmax	
ft^2	m^2	lb-oz	kg	ft^2	m^2	lb-oz	kg
30	3	2-0	0.9	150	14	10-0	4.5
40	4	2-10	1.2	160	15	10-10	4.8
50	5	3-5	1.5	170	16	11-5	5.1
60	6	4-0	1.8	180	17	12-0	5.4
70	7	4-10	2.1	190	18	12-10	5.7
80	8	5-5	2.4	200	19	13-5	6.0
90	9	6-0	2.7	210	20	14-0	6.3
100	10	6-10	3.0	220	21	14-10	6.6
110	11	7-5	3.3	230	22	15-5	6.9
120	12	8-0	3.6	240	23	16-0	7.2
130	13	8-10	3.9	250	24	16-10	7.5
140	14	9-5	4.2	260	25	17-5	7.8

Table 3-1

The required minimum room area

Mc		Amin/TAmin		Mc		Amin/TAmin	
lb-oz	kg	ft^2	m^2	lb-oz	kg	ft^2	m^2
2-2	1.0	33.1	3.1	10-2	4.6	152.1	14.2
2-9	1.2	39.7	3.7	10-9	4.8	158.7	14.8
3-0	1.4	46.3	4.4	11-0	5.0	165.3	15.4
3-7	1.6	52.9	5.0	11-7	5.2	171.9	16.0
3-15	1.8	59.5	5.6	11-14	5.4	178.5	16.6
4-6	2.0	66.1	6.2	12 -5	5.6	185.1	17.2
4-13	2.2	72.7	6.8	12-12	5.8	191.7	17.9
5-4	2.4	79.3	7.4	13-3	6.0	198.4	18.5
5-11	2.6	86.0	8.0	13-10	6.2	205.0	19.1
6-2	2.8	92.6	8.7	14-1	6.4	211.6	19.7
6-9	3.0	99.2	9.3	14-8	6.6	218.2	20.3
7-0	3.2	105.8	9.9	14-15	6.8	224.8	20.9
7-7	3.4	112.4	10.5	15-6	7.0	231.4	21.5
7-15	3.6	119.0	11.1	15-14	7.2	238.0	22.2
8-6	3.8	125.6	11.7	16-5	7.4	244.6	22.8
8-13	4.0	132.2	12.3	16-12	7.6	251.2	23.4
9-4	4.2	138.8	12.9	17-3	7.8	257.9	24.0
9-11	4.4	145.5	13.6				

Table 3-2

The minimum circulation airflow

Mc		Qmin		Mc		Qmin	
lb-oz	kg	CFM	m³/h	lb-oz	kg	CFM	m³/h
2-2	1.0	59	100	10-2	4.6	275	467
2-9	1.2	71	121	10-9	4.8	287	488
3-0	1.4	83	141	11-0	5.0	298	506
3-7	1.6	95	161	11-7	5.2	310	527
3-15	1.8	107	182	11-14	5.4	322	547
4-6	2.0	119	202	12 -5	5.6	334	567
4-13	2.2	131	223	12-12	5.8	346	588
5-4	2.4	143	243	13-3	6.0	358	608
5-11	2.6	155	263	13-10	6.2	370	629
6-2	2.8	167	284	14-1	6.4	382	649
6-9	3.0	179	304	14-8	6.6	394	669
7-0	3.2	191	325	14-15	6.8	406	690
7-7	3.4	203	345	15-6	7.0	418	710
7-15	3.6	215	365	15-14	7.2	430	731
8-6	3.8	227	386	16-5	7.4	442	751
8-13	4.0	239	406	16-12	7.6	454	771
9-4	4.2	251	426	17-3	7.8	466	792
9-11	4.4	263	447				

Table 3-3

If the altitude of installation is higher than 2000 ft, the required minimum room area follow as Table 3-4.

	Altitude(ft)							
	2001-4000	4001-6000	6001-8000	8001-10000	10001-12000	12001-14000	14001-15000	above 15000
Charge lb	Minimum Conditioned Space(ft²)							
2	33	35	37	39	42	45	47	49
3	50	53	56	59	63	68	71	73
4	66	70	74	79	85	91	94	98
5	83	88	93	99	106	113	118	122
6	100	105	112	119	127	136	141	147
7	116	123	130	138	148	159	165	171
8	133	140	149	158	169	181	188	196
9	149	158	167	178	190	204	212	220
10	166	175	186	198	211	227	235	245
11	183	193	205	218	232	249	259	269
12	199	211	223	237	254	272	282	294
13	216	228	242	257	275	295	306	318
14	232	246	260	277	296	318	330	343
15	249	263	279	297	317	340	353	367
16	266	281	298	317	338	363	377	392
17	282	298	316	336	359	386	400	416
18	299	316	335	356	380	408	424	440
19	315	333	353	376	402	431	447	465
20	332	351	372	396	423	454	471	489

Table 3-4

⚠ CAUTION

The allowable maximum refrigerant charge of the Table 3-1 or the required minimum room area of the Table 3-2 is available only if the following conditions are met:
Minimum velocity of 3.28 ft/s, which is calculated as the indoor unit airflow divided by the nominal face area of the outlet. The grill area shall not be deducted.
Minimum airflow rate must meet the corresponding values in Table 3-3, which is related to the actual refrigerant charge of the system (Mc).
R454B refrigerant leakage sensor is configured.

NOTE

The maximum refrigerant limit described above applies to unventilated areas. If adding additional measures, such as areas with mechanical ventilation or natural ventilation, the maximum refrigerant charge can be increased or the minimum room area can be reduced.
R454B refrigerant leakage sensor is configured for the indoor unit, and meets the incorporated circulation airflow requirements, the maximum refrigerant charge or minimum room area can be determined according to Table 3-1 or Table 3-2.

⚠ CAUTION

If the actual room area, air outlet height, and refrigerant charge amount are not reflected in the above table, more severe cases need to be considered according to the data in the Table 3-1, 3-2, 3-3.

⚠ CAUTION

Instruction for installation of the critical-to-safety wiring connection of the leak detection sensor or leak detection system to the furnace assembly. The wiring shall be not less than 18 AWG with a minimum insulation thickness of 1.58 mm or protected from damage. Critical-to-safety wiring is any field installed wiring necessary to fulfill the requirements of Table 3-2 in the event of detection of a leak.
Shall not be installed on furnaces with an inductive electrical greater than Le as calculated as follows:

the switched electrical load (Le) in kVA is less than or equal to:
- Le = 5 x (6,7/Su)4 when breaking all phases;
- Le = 2,5 x (6,7/Su)4 when breaking two legs of a three phase load, or when breaking one or two legs of a single phase load.

where
Le is the switched inductive electrical load in kilovoltamperes (kVA);
Su is the burning velocity of a refrigerant in centimeters per second (cm/s).

Detection of a leak shall turn on the indoor fan at the highest available speed or turn it on to not less than Qmin as shown in Table 3-3.

- Installation scheme flow chart

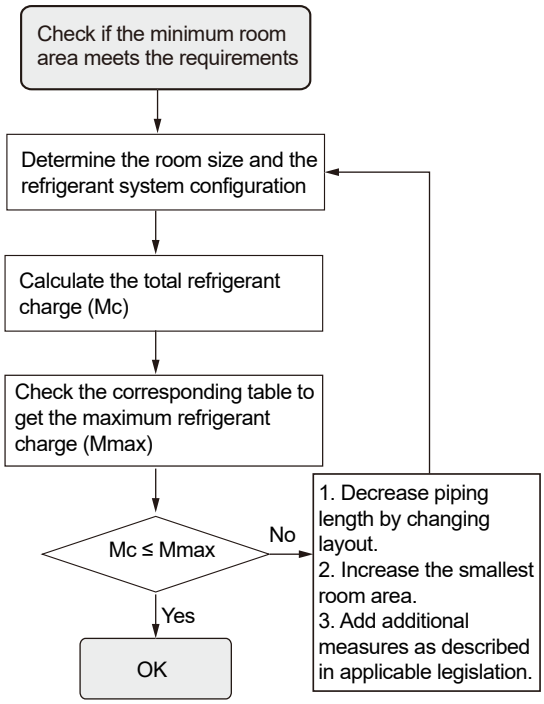

Fig. 3-3

3.6 Installation of the R454B Leak Mitigation Kit

⚠ WARNING

Proper Field Wiring and Grounding Required!

Failure to follow code could result in death or serious injury. All field wiring MUST be performed by qualified personnel. Improperly installed and grounded field wiring poses FIRE and ELECTROCUTION hazards. To avoid these hazards, you MUST follow requirements for field wiring installation and grounding as described in NEC and your local/state/national electrical codes.

⚠ WARNING

Personal Protective Equipment (PPE) Required!

Failure to wear proper PPE for the job being undertaken could result in death or serious injury. Technicians, in order to protect themselves from potential electrical, mechanical, and chemical hazards, MUST follow precautions in this manual and on the tags, stickers, and labels, as well as the instructions below:

- Before installing/servicing this unit, technicians MUST put on all PPE required for the work being undertaken (Examples; cut resistant gloves/sleeves, butyl gloves, safety glasses, hard hat/bump cap, fall protection, electrical PPE and arc flash clothing). ALWAYS refer to appropriate Safety Data Sheets (SDS) and OSHA guidelines for proper PPE.
- When working with or around hazardous chemicals, ALWAYS refer to the appropriate SDS and OSHA/GHS (Global Harmonized System of Classification and Labelling of Chemicals) guidelines for information on allowable personal exposure levels, proper respiratory protection and handling instructions.
- If there is a risk of energized electrical contact, arc, or flash, technicians MUST put on all PPE in accordance with OSHA, NFPA 70E, or other country-specific requirements for arc flash protection, PRIOR to servicing the unit. Never perform any switching, disconnecting, or voltage testing without proper electrical ppe and arc flash clothing. Ensure electrical meters and equipment are properly rated for intended voltage.

⚠ WARNING

Follow EHS Policies!

Failure to follow instructions below could result in death or serious injury.

- All personnel must follow the Environmental, Health and Safety (EHS) policies when performing work such as hot work, electrical, fall protection, lockout/tagout, refrigerant handling, etc. Where local regulations are more stringent than these policies, those regulations supersede these policies.
- All personnel should always follow local regulations.

3.6.1 About the leak detection kit

When the refrigerant sensor detects a leak, the Mitigation Control Board shuts down the outdoor unit and energizes the blower to the maximum fan speed in order to dilute any concentration of refrigerant. Gas heating is also disabled for 5 minutes during a refrigerant detection event. Heating will return when refrigerant is no longer detected. The "dry" contact Alarm relay closes enabling a field provided audible or visual alarm to alert occupants.

3.6.1.1 For the requirements of gas furnaces

In accordance with the latest UL 60335-2-40 regulations, the coil and gas furnaces are required to meet specific requirements for operating air volume.

⚠ CAUTION

Before installing the unit, the service personnel should carefully check the air meter of the gas furnace to check whether it meets the minimum air volume requirements, and the installation is prohibited if it does not meet the requirements.

Minimum Airflow Setting	
System refngerant charge (lb) ♦	Minimum Airflow Setting (CFM)
less than 4	no mimimum
4	108
5	135
6	162
7	189
8	216
9	244
10	271
11	298
12	325
13	352
14	379
15	406
16	433
17	460
18	487
19	514
20	541

♦ The system refrigerant charge is the total system charge which is marked on the system according to the instructions provided by the manufacturer of the outdoor unit.

3.6.1.2 Installing the refrigerant leak mitigation control kit

1. Turn off all power supplies of gas furnace, outdoor unit and wire controller.

2. Open the upper cover of the leak mitigation control kit,and fix the kit on the front or side of Acoil with self-tapping screws. Pay attention to the sponge pad in the accessory bag. This should be placed on the back of the mitigation kit to avoid damage to the A-Coil. See example in Fig 3-4.

3. According to the wiring diagram, connect the mitigation board and the signal cables of the gas furnace, outdoor unit and wire controller respectively. Note that the connection cables should use 18AWG specifications.

4. Install the top cover of the mitigation control kit.

5. Power on the gas furnace and outdoor unit respectively, and check whether the gas furnace and outdoor unit are running normally.

NOTICE

Installation precautions:

(1) Only install the mitigation kit in the designated locations to avoid damaging the coil.

(2) When installing the mitigation control kit, do not use screws more than 0.4 inches long to prevent screws from penetrating the glass fiber cotton;

(3) When installing the mitigation control kit, please check that the screws are away from the coil tubes when installed;

(4) When mounted on the side, the electric control box can be aligned with the indicating label arrangement, as shown Fig. 3-6 and Fig. 3-7;

(5) In the side installation, if the drill is used during installation, the drilling depth should not exceed 0.2 inches to prevent the glass fiber cotton from being hit;

(6) When installing the mitigation kit on the front panel, use the locating dimples in the panel as shown in Fig. 3-5;

(7) The kit is not allowed to be installed in the lower half of the coil front panel because there is a coil inside that could be punctured by screws. This area is shown by the shaded area in Fig.3-4.

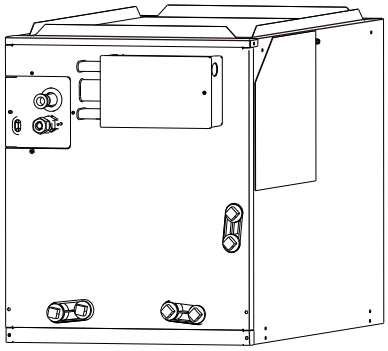

Fig. 3-4 Front view

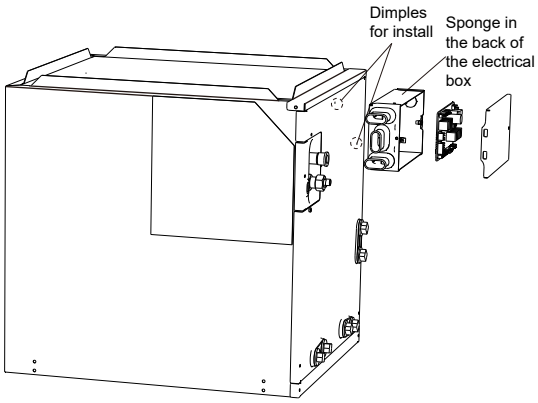

Fig. 3-5 Mounting section view

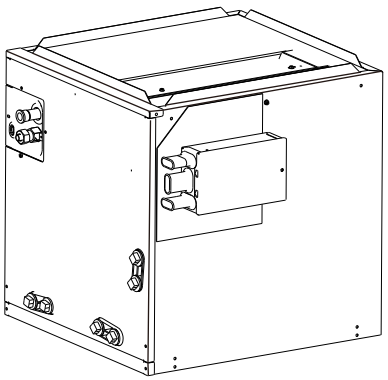

Fig. 3-6 Install right view

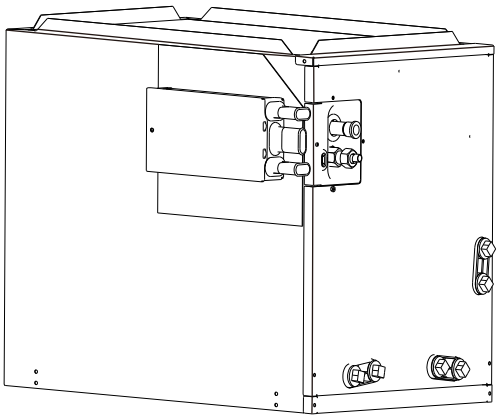

Fig. 3-7 Install left view

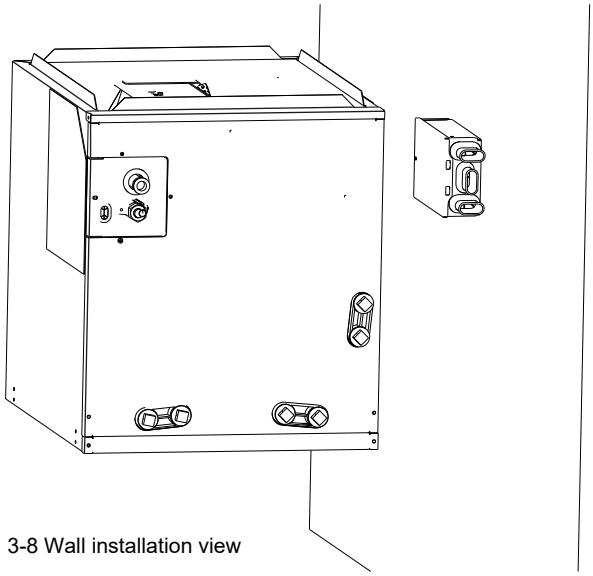

Fig. 3-8 Wall installation view

⚠ WARNING

If the installation configuration does not allow for the kit to be mounted on the cased coil, the leak mitigation kit can be installed on a nearby wall or surface as shown in Fig. 3-8.

3.6.1.3 Function description of the mitigation control board

When the mitigation kit detects refrigerant or other operating faults, perform the following operations.

LED1 Number of green flashes	Fault Description	Fault cause	Unit response & handling method
1	The refrigerant sensor communication fails.	Fails to communicate with the refrigerant sensor for 30 consecutive seconds or the refrigerant sensor is faulty.	LED1 of the KIT board blinks green once, turns off the outdoor unit signal, shuts down the compressor, forcibly outputs the air supply signal to the gas furnace, turns off the heating signal of the gas furnace for 5 minutes, and turns on the maximum airflow of the gas furnace. Contact the after-sales personnel of the manufacturer.
2	Refrigerant concentration exceeds the limit alarm value.	A refrigerant leak has been detected	1, maintain ventilation, cut off the outdoor unit signal, turn off the compressor to reduce refrigerant circulation, and avoid open flame; 2. Force the output air supply signal, disconnect the heating signal of the gas furnace, and open the highest wind gear of the gas furnace for 5 minutes until the refrigerant concentration is reduced to a safe value.
3	The refrigerant sensor is faulty.	The refrigerant leakage sensor determines the fault by itself, such as the sensor's own communication error, and the detection concentration exceeds the limit value.	Turn off the outdoor unit signal, shut down the compressor, force out the air supply signal of the gas furnace, turn off the heating signal of the gas furnace for 5 minutes, open the maximum airflow of the gas furnace, and replace with a new refrigerant detection sensor.
4	Life reminder.	The refrigerant sensor expires.	Turn off the outdoor unit signal, shut down the compressor, force out the air supply signal of the gas furnace, turn off the heating signal of the gas furnace for 5 minutes, open the maximum airflow of the gas furnace, and replace with a new refrigerant detection sensor.

3.6.1.4 Refrigerant sensor connection

Connect the cable of refrigerant sensor to CN26 on the board in MCB kit.

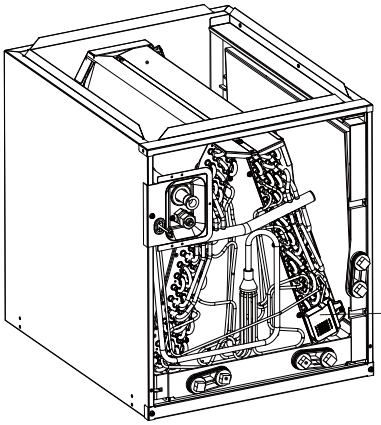

⚠WARNING

The refrigerant sensor must be in the original position and shall not be repositioned.

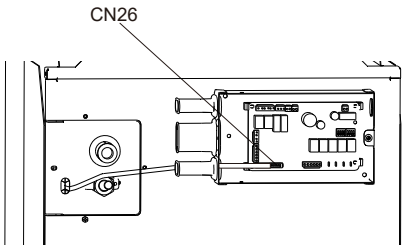

⚠ WARNING

After installing the sensor, add a zip tie to strain relief the incoming refrigerant sensor wire.

Fig. 3-9 REFRIGERANT SENSOR LOCATION

Fig. 3-10 REFRIGERANT SENSOR CONNECTION

3.6.2 Field wiring diagrams

3.6.2.1 Wiring diagram

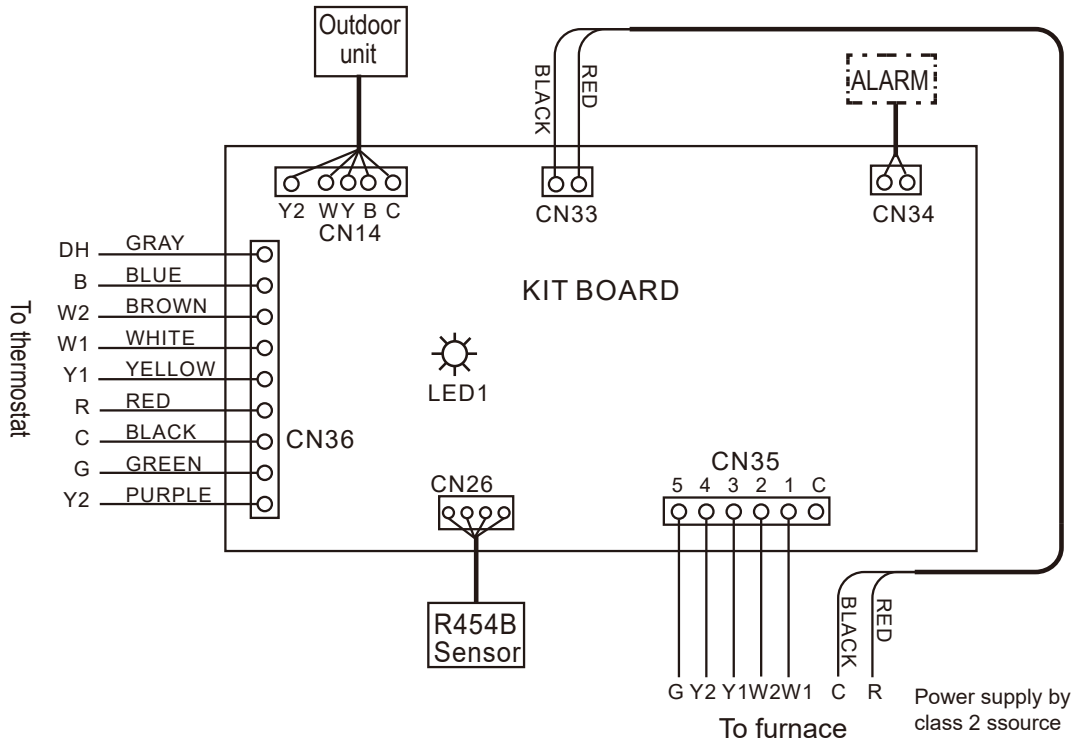

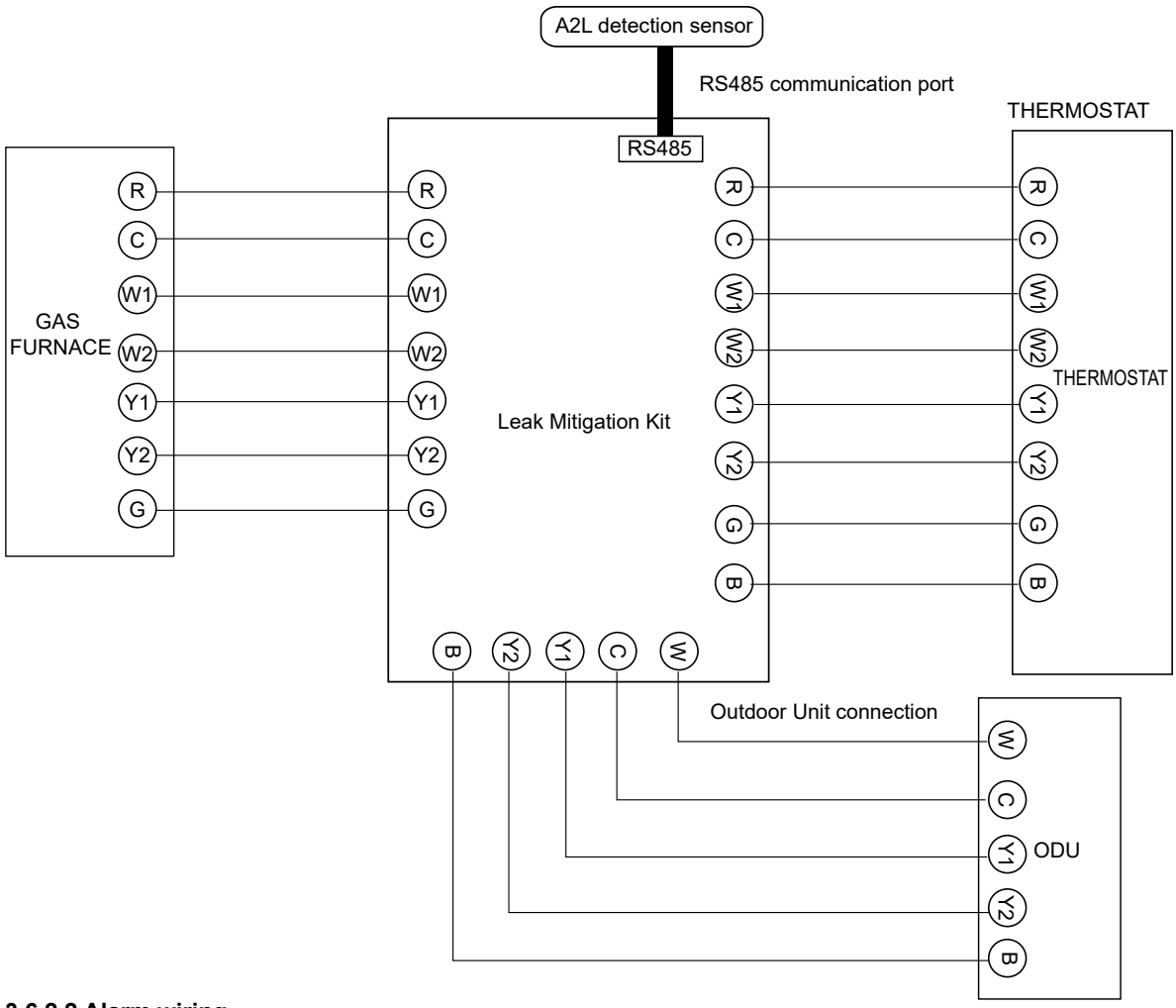

3.6.2.2 Alarm wiring

⚠ WARNING

Tightening the rubber ring after wiring for insect protection.

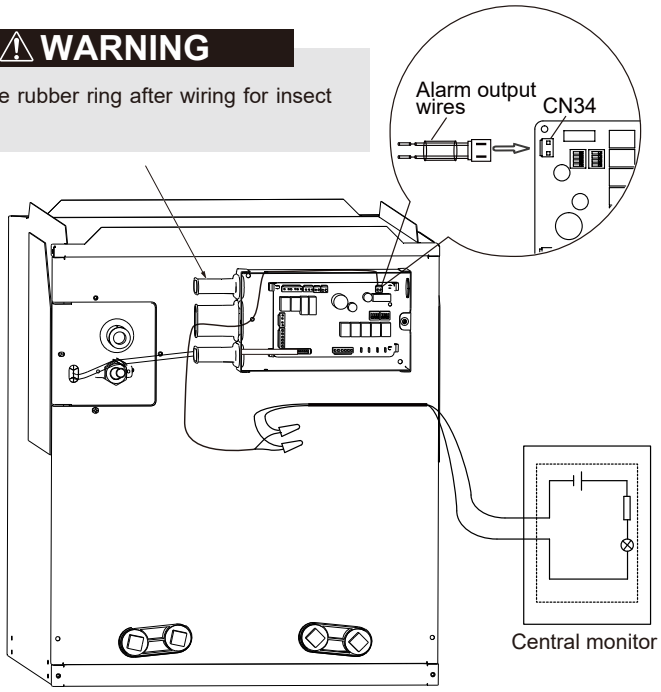

⚠ WARNING

The rated operating condition of ALARM is 24 V AC/1 A or 30 V DC/1A or 250 V AC/1 A.

The type of wiring for ext output should use cables of AWG 18 (Min. AWG 18).

Mitigation Board Accessory Shutdown and Alarm Switch

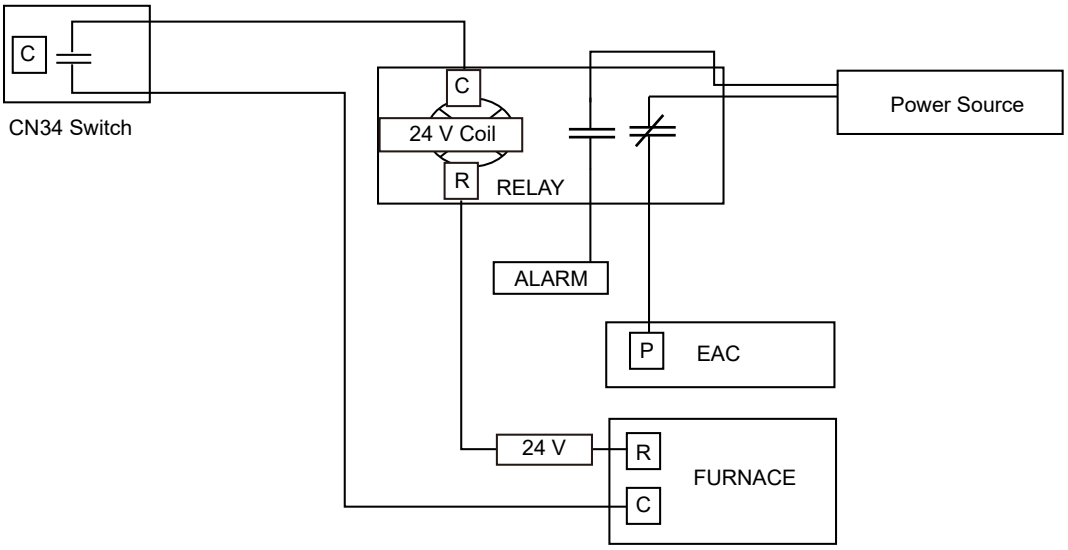

Rated @ 1 amp 24 V AC / 120 V AC / 240 V AC

4 PISTION/TXV INSTALLATION

4.1 Piston Installation

1. Using a wrench to loosen the nut, remove the nut and sealing flange.

2. Check the piston sizes for each outdoor/coil combination in Table 4-1 and choose the correct piston size for your combination.

3. If a different size piston is needed for your system combination, remove the pre-installed piston.

NOTE

Avoid pulling the piston sleeve out when removing the pre-installed piston.

4. Choose correct size piston from the doc pack and insert it with correct orientation.

5. Replace outer O-ring with the O-ring provided in the doc pack.

6. Attach the connection pipe with nut and tighten to 1/6th turn past hand-tighten.

This coil comes with a factory installed piston metering device. See Table 4-1 for factory installed piston size. Some system combinations will require a different sized piston to be field installed.

* Use the piston size recommended by the outdoor unit if available.

* The ship-with literature bag will contain additional R454B pistons for most applications.

* Contact your local parts center to order the appropriate piston if it is not included with the literature.

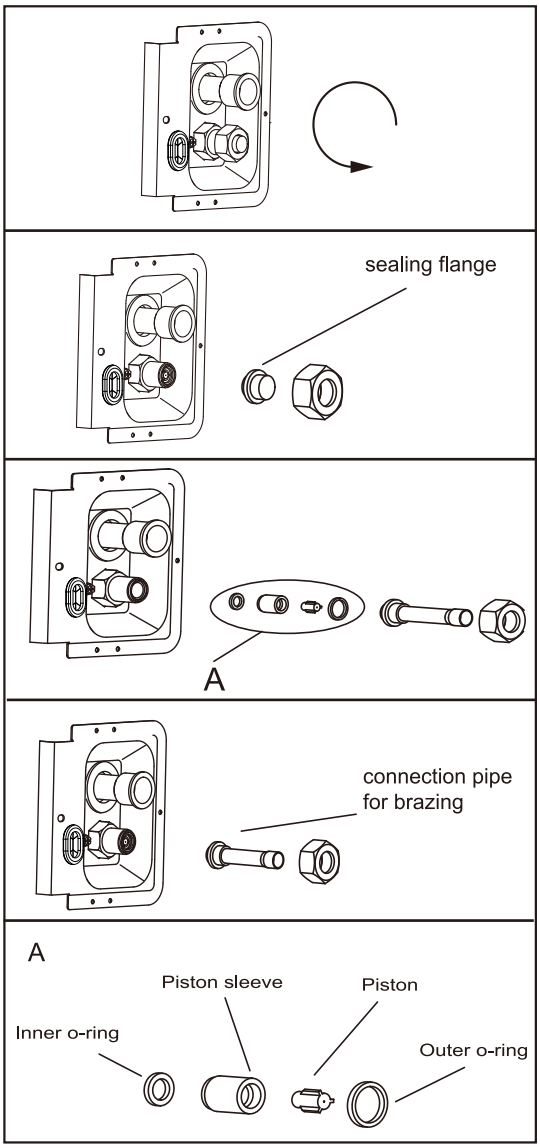

Fig. 4-1

4.2 Optional TXV Kit Installation

Reference TXV kit literature for installation instructions.

1. Use a wrench to loosen the nut and remove the sealing flange and sealing gasket.
2. Take out the connecting pipe from accessory package and braze the connecting pipe onto the refrigeration-out pipe.
3. Install the sealing washers, TXV and flange connection tube.
4. Use a wrench fasten nut and connecting pipe. (30±3 N·m).
5. Connect TXV equalizer pipe to the port on the connecting pipe.
6. Fix bulbs on the connecting pipe using use accessory in TXV kit.

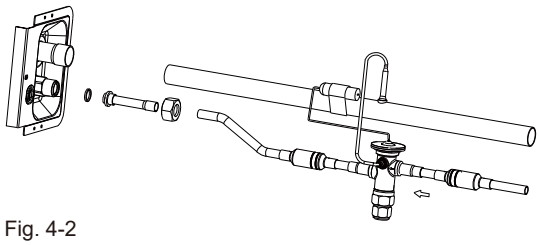

Fig. 4-2

A TXV may be required to achieve minimum efficiency ratings or for long refrigerant line set applications. Reference AHRI for system combination ratings.

Reference the outdoor unit installation guide to charge the system when using a TXV.

Table 4-1 Factory installed piston size for each coil model. Additional piston sizes are provided in the ship-with literature bag as necessary.

J5GX	Psiton/orifice sizes									
Model	47	49	56	60	63	68	72	74	80	88
CA003	X	X	X	X*	X	X				
CB004	X	X	X	X*	X	X				
CC005	X	X	X	X*	X	X				

* means that this piston is pre-installed

Table 4-1

Outdoor Unit Capacity (Tons)	Piston Size* (R454B)	Piston Kit
1.5	47	MAYORIACHP0047B
2	56	MAYORIACHP0056B
2.5	60	MAYORIACHP0060B
3	63	MAYORIACHP0063B
3.5	68	MAYORIACHP0068B
4	72	MAYORIACHP0072B
5	80	MAYORIACHP0080B

* Piston size needed for system combination may not be pre-installed.
See Table 4-1 for pre-installed size.

Table 4-2

Table 4-3 The TXV kit part numbers needed for system

Outdoor Unit Capacity (Tons)	R454B TXV Kit
1.5-3.0	5AYTXVH3A1836A
3.5-4.0	5AYTXVH3A4248A
5.0	5AYTXVH3A6000A

Table 4-3

⚠ WARNING

The Piston Size in Table 4-2 is only recommended size, and the specific value should be subject to the requirements of outdoor unit.

⚠ WARNING

Failure to install the proper piston can lead to poor system performance and possible compressor damage.

⚠ CAUTION

Please use the nut joint and a new outer O-ring and sealing flange that comes with the machine, which meet the ISO 14903 certification. Otherwise, there is a risk of refrigerant leakage and causing danger.

⚠ CAUTION

An improperly charged system will likely cause loss in system performance and may damage the compressor.

5 REFRIGERANT LINE

The suction pipe and liquid pipe of the indoor unit need to be protected and cannot be grabbed when moving the indoor unit.
Keep the coil connections sealed until refrigerant connections are made. See the Installation Instructions for the outdoor unit for details on line sizing, tubing installation, and charging information.
Coil is shipped with Nitrogen. Evacuate the system before charging with refrigerant.
Install refrigerant tubing so that it does not block service access to the front of the unit.
Nitrogen should flow through the refrigerant lines while brazing.
Use a brazing shield to protect the cabinet's paint and a wet rag to protect the rubber grommet and TXV seal ring from being damaged by torch flames.
After the refrigerant connections are made, seal the gap around the connections with pressure sensitive gasket.
The pipework, including the piping material, pipe routing, and installation, must be protected from physical damage during operation and service. It should also comply with national and local codes and standards, such as ASHRAE 15, ASHRAE 15.2, IAPMO Uniform Mechanical Code, ICC International Mechanical Code and CSA B52.prior to being covered or enclosed, the pipework should undergo inspection to ensure compliance. All filed joints shall be accessible for inspection prior to being covered or enclosed.

All joints made in the installation between parts of the refrigerating system, with at least one part charged, shall be made in accordance with the following:

— A brazed, welded, or mechanical connection shall be made before opening the valves to permit refrigerant to flow between the refrigerating system parts. A vacuum valve shall be provided to evacuate the interconnecting pipe or any uncharged refrigerating system part.

— Mechanical connectors used indoors shall comply with ISO 14903. When mechanical connectors are reused indoors, sealing parts shall be renewed. When flared joints are reused indoors, the flare part shall be refabricated.

— Refrigerant tubing shall be protected or enclosed to avoid damage.

— Flexible refrigerant connectors (such as connecting lines between the indoor and outdoor unit) that may be displaced during normal operation shall be protected against mechanical damage.

Compliance is checked according to the installation instructions and a trial installation, if necessary.

Field-made refrigerant joints indoors shall be tightness tested. The test method shall have a sensitivity of 5 grams per year of refrigerant or better under a pressure of at least 0.25 times the maximum allowable pressure. No leak shall be detected.

After completion of field piping for split systems, the field pipework shall be pressure tested with an inert gas and then vacuum tested prior to refrigerant charging, according to the following requirements.

The minimum test pressure for the low side of the system shall be the low side design pressure and the minimum test pressure for the high side of the system shall be the high side design pressure, unless the high side of the system cannot be isolated from the low side of the system in which case the entire system shall be pressure tested to the low side design pressure.

— Mechanical joints in compliance with ISO 14903 or UL 207 (U.S. only).

— Welded or brazed joints.

— Joints in enclosures that vent to the unit or to the outside.

Compliance is checked by inspection and tests.

⚠ CAUTION

Use a wet rag to protect the two seal ring in the input pipe from being damaged by torch flames while brazing.

After the brazing work is finished, make sure to check if there is refrigerant leakage. After checking for vapor leaks, be sure to insulate the pipe connections referring.

NOTE

It is recommended to install a filter drier, the filter drier should be installed in the liquid line between the outdoor unit's liquid line service valve and the indoor coil's metering device. The filter drier should be compatible with R454B refrigerant.

6 DUCTWORK

Field ductwork must comply with the National Fire Protection Association NFPA 90A, NFPA 90B and any applicable local ordinance.

⚠ DANGER

Do not under any circumstances, connect return ductwork to any other heat producing device such as fireplace insert, stove, etc.
Unauthorized use of such devices may result in fire, carbon monoxide poisoning, explosion, personal injury or property damage.

Sheet metal ductwork in unconditioned spaces must be insulated and covered with a vapor barrier. Fibrous ductwork may be used if constructed and installed in accordance with SMACNA Construction Standard on Fibrous Glass Ducts. Ductwork must comply with National Fire Protection Association as tested by UL Standard 181 for Class I Air Ducts. Check local codes for requirements on ductwork and insulation.

- Duct system must be designed within the range of external static pressure the unit is designed to operate against. It is important that the system airflow be adequate. Make sure supply and return ductwork, grills, special filters, accessories, etc. are accounted for in total resistance.
- Design the duct system in accordance with “ACCA” Manual “D” Design for Residential Winter and Summer Air Conditioning and Equipment Selection. Latest editions are available from: “ACCA” Air Conditioning Contractors of America, 1513 16th Street, N.W., Washington, D.C. 20036. If duct system incorporates flexible air duct, be sure pressure drop information (straight length plus all turns) shown in “ACCA” Manual “D” is accounted for in the system.
- Supply plenum is attached to the 3/4” duct flanges supplied with the unit. Attach flanges around the blower outlet.

  IMPORTANT: If an elbow is included in the plenum close to the unit, it can not be smaller than the dimensions of the supply duct flange on the unit.

  IMPORTANT: The front flange on the return duct, if connected to the blower casing, must not be screwed into the area where the power wiring is located. Drills or sharp screw points can damage insulation on wires located inside unit.

- Secure the supply and return ductwork to the unit flanges, using proper fasteners for the type of duct used and tape the duct-to-unit joint as required to prevent air leaks.

⚠ WARNING

If appliances connected via an air duct system to one or more rooms are installed in a room with an area less than shown in section 3.5 Table 3-3, that room shall be without continuously operating open flames (e.g. an operating gas appliance) or other potential ignition sources (for e.g. an operating electric heater, hot surfaces). A flame-producing device may be installed in the same space if the device is provided with an effective flame arrest.

For appliances connected via an air duct system to one or more rooms, auxiliary devices which may be a potential ignition source shall not be installed in the duct work. Examples of such potential ignition sources are hot surfaces with a temperature exceeding 700°C and electric switching devices.

For appliances connected via an air duct system to one or more rooms, only auxiliary devices approved by the appliance manufacturer or declared suitable with the refrigerant shall be installed in connecting ductwork.

7 AIRFLOW PERFORMANCE

Airflow performance [CFM VS Pressure drop]

Pressure drop characteristics for cooling and heat pump coils								
Pressure drop (Inchs of water)								
Model	0.05	0.1	0.15	0.2	0.25	0.3	0.35	0.4*
J5GXCA003AC6HUA	307	485	618	729	823	911	991	1063
J5GXCB004AC6HUA	327	527	682	810	925	1024	1122	1217
J5GXCC005AC6HUA	360	585	748	893	1019	1132	1238	1348

Table 7-1

Data based on wet coil with entering air at 80 deg F DB / 67 deg F WB without air filter.
The maximum allowable pressure drop is 0.4 in H_2O.
The maximum CFM is the data at 0.4 in H_2O pressure.

Maximum airflow setting

NOTE

Water blow-off could occur in certain installation positions if the airflow setting exceeds the maximum values listed.

NOTE

Airflow should not exceed the maximum airflow setting specified in Table 7-2. Exceeding these CFM limits may result in water blowing from the coil surface and into the ductwork.

Maximum airflow seeting (CFM)		
Model	Upflow	Downflow
J5GXCA003AC6HUA	1200	1050
J5GXCB004AC6HUA	1250	1050
J5GXCC005AC6HUA	1250	1050

Table 7-2

8 DRAIN APPLICATION

8.1 Condensate Drain Piping

Consult local codes for special requirements.

To provide extra protection from water damage, it is always recommended to install an additional drain pan, provided by installer under the entire unit with a separate drain line. Manufacturer will not be responsible for any damages due to the failure to follow these recommendations.

8.2 Drain Pan Installation

⚠ WARNING

Do not use the coil pan shipped with the unit on OIL furnaces or any application where the temperature of the drain pan may exceed 275°F. A field fabricated metal drain pan can also be used for these type of applications.

Failure to follow this warning may result in property damage and/or personal injury.

NOTE

Use Teflon tape on the drain line connections. Do not use pipe joint compound or PVC/CPVC cement on drain nipple.

The coil drain pan has a primary and an optional secondary drain with 3/4" NPT female connections; use either PVC or copper pipe and hand tighten to a torque of approximately 37 in-lb. to prevent damage to the drain pan connection. An insertion depth between 0.355 to 0.485 inches (3-5 turns) should be expected at this torque setting.

Use male 3/4" NPT threaded fitting for outside connection and make sure the drain holes are not blocked.

Insulation may be needed for drain line to prevent sweating.

Drain pan has two drain connections on each side to provide flexibility of connection and drainage. Make sure pan has proper pitch and plugged if second connection is not used.

If the secondary drain line is required, run the line separately from the primary drain and terminate it where it can be easily seen.

NOTE

Water coming from this line means the coil‘s primary drain is plugged and needs clearing.

Install a trap in the drain line below the bottom of the drain pan. If using a copper drain line, solder a short piece of pipe to the connector before installing a drain fitting. DO NOT over torque the 3/4" copper connector to the plastic drain connection. Use a wet rag or heatsink material on the short piece to protect plastic drain pan, complete the rag or heatsink material on the short piece to protect plastic drain pan, complete the drain line installation (Fig. 8-1). Use (Fig. 8-2) as a template for typical drain pipe routing.

This figure shows how to avoid interference with vent piping.

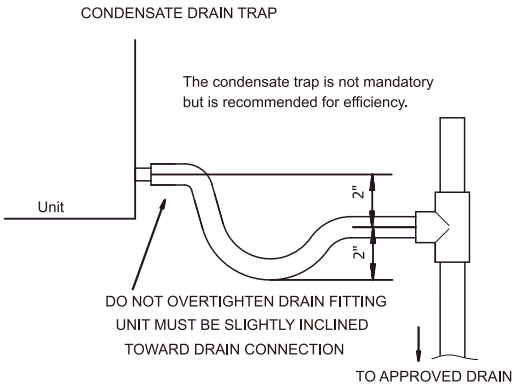

Fig. 8-1 DRAIN LINE INSTALLATION

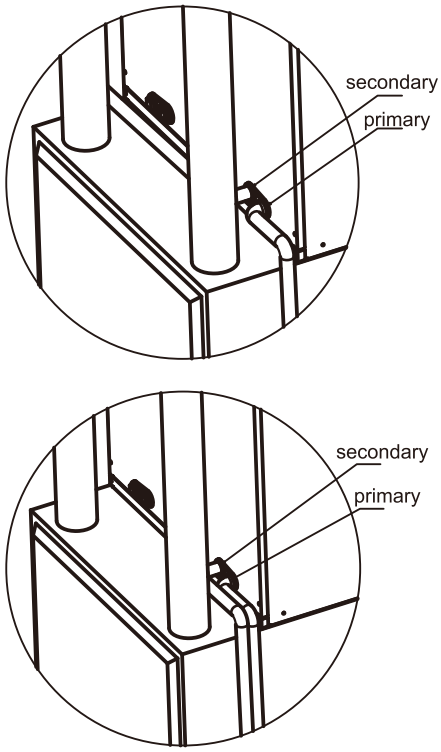

Fig. 8-2 DRAIN PIPE ROUTING

9 DISPOSAL

Comply with national regulations.
Components and accessories from the units are not part of ordinary domestic waste.
Complete units , compressors, motors etc. are only to be disposed of via qualified disposal specialists.
This unit uses flammable refrigerant R454B. Please contact the dealer when you want to dispose of this unit. Law requires that the collection, transportation and disposal of refrigerants must conform with the regulations governing the collection and destruction of hydrofluorocarbons.

TwentyThreeC, LLC
800 Beaty Street,
Davidson,NC, 28036
www.oxboxhvac.com

For more information contact
your local dealer (distributor)

Since the manufacturer has a policy of continuous product and product data improvement, it reserves the right to change the design and specification without notice.

©. 2019 TwentyThreeC, LLC

此页不做菲林，仅核对使用

This page is not for filming, only for checking

印刷技术要求

Technical requirements of the printing

材质 Material	封面封底内页双胶纸80g Cover, back cover, inside pages, 80g double gummed paper
规格 Specification	A4规格 A4 size
颜色 Color	黑白 Black and white
其他 Others	

设计更改记录表（仅做说明用，不做菲林）

Design change record form (for explanation purposes only, not for film production)

版本升级 Version upgrade	更改人 Modified By	更改日期 Change date	更改主要内容 The main changed content	涉及更改页面（印刷页码） age changes involved (printed page numbers)