INSTALLATION AND OPERATION MANUAL

Air Conditioner
1.5-5 Tons R454B
UP TO 15.2 SEER2
18-60K With Microchannel Heat Exchanger
61K With Copper and Fin Heat Exchanger

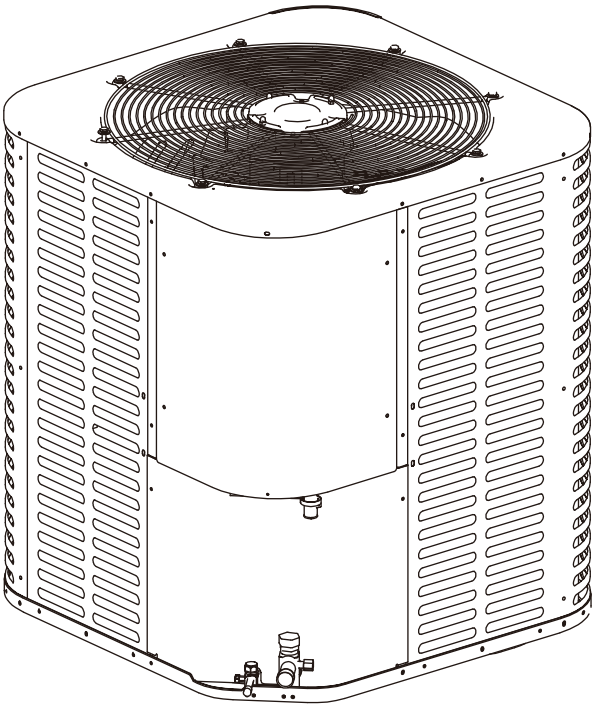

⚠ WARNING

Explosion Hazard!

Failure to follow instructions below could result in an explosion which could result in death or serious injury, and equipment damage.
NEVER bypass system safeties in order to pump down the unit component's refrigerant into the micro channel heat exchanger (MCHE) coil. Do NOT depress the compressor contactor since it effectively bypasses the high-pressure control.

Please read this manual carefully and keep it for future reference.
All the pictures in this manual are for illustrations purpose only.

RECOGNIZE THIS SYMBOL AS AN INDICATION OF IMPORTANT SAFETY INFORMATION

⚠ WARNING

These instructions are intended as an aid to qualified licensed service personnel for proper installation, adjustment and operation of this unit. Read these instructions thoroughly before attempting installation or operation. Failure to follow these instructions may result in improper installation, adjustment, service or maintenance possibly resulting in fire, electrical shock, property damage, personal injury or death.

⚠ WARNING

This appliance is not intended for use by persons (including children) with reduced physical, sensory or mental capabilities, or lack of experience and knowledge, unless they have been given supervision or instruction concerning use of the appliance by a person responsible for their safety.Children should be supervised to ensure that they do not play with the appliance.This unit is only used outdoor.

⚠ WARNING

This product can expose you to chemicals including lead, which are known to the state of california to cause cancer and birth defects or other reproductive harm. For more information go to www.p65Warnings.ca.gov

NOTE

The manufacturer recommends installing only approved matched indoor and outdoor systems. All of the manufacturer's split systems are AHRI rated .Some of the benefits of installing approved matched indoor and outdoor split systems are maximum efficiency, optimum performance and the best overall system reliability.

CONTENTS

1 SAFETY

- 1.1 Safety Signs 01
- 1.2 Safety Precautions 02

2 UNIT LOCATION CONSIDERATIONS

- 2.1 Unit Dimensions 08
- 2.2 Refrigerant Line Sizes 08
- 2.3 Required Refrigerant Line Length 08
- 2.4 Location Restrictions 09
- 2.5 Refrigerant Charge and Room Area Limitations 10

3 UNIT PREPARATION

- 3.1 Pre-installation 13

4 SETTING UP THE UNIT

- 4.1 Pad Installation 13

5 REFRIGERANT LINE CONSIDERATIONS

- 5.1 Service Valve Connection Sizes 14
- 5.2 Refrigerant Line Insulation 14
- 5.3 Reuse Existing Refrigerant Lines 14

6 REFRIGERANT LINE ROUTING

- 6.1 Precautions 15

7 REFRIGERANT LINE CONNECTION

- 7.1 Connecting to Refrigerant Lines 17

8 REFRIGERANT LINE BRAZING

- 8.1 Braze the Refrigerant Lines 17

9 REFRIGERANT LINE LEAK CHECK

- 9.1 Check for Leaks 18

10 EVACUATION

- 10.1 Evacuate the Refrigerant Lines and Indoor Coil 19

11 SERVICE VALVES

- 11.1 Open the Service Valves 19

12 ELECTRICAL - LOW VOLTAGE

- 12.1 Low Voltage Maximum Wire Length 20
- 12.2 Low Voltage Wiring 21

13 ELECTRICAL - HIGH VOLTAGE

- 13.1 High Voltage Power Supply 23
- 13.2 High Voltage Disconnect Switch and Breaker 23
- 13.3 High Voltage Wiring 24

14 START UP

- 14.1 System Start Up 24

15 SYSTEM CHARGE ADJUSTMENT

- 15.1 Charging: Superheating Charging in Cooling for Piston Match-Ups (above 55 ºF outdoor temp) 25
- 15.2 Charging: Subcooling Charging in Cooling for TXV Match-Ups (above 55 ºF outdoor temp) 29
- 15.3 Charging: Weigh-In Method 31

16 SYSTEM OPERATION AND TROUBLESHOOTING

- 16.1 Protection Function 32
- 16.2 LED Status 32
- 16.3 Two-stage compressor (61K AC only) 32
- 16.4 Temperature Sensor Resistance Table 33
- 16.5 Electrical Data Table 33
- 16.6 Error Code Table and Troubleshooting 34
- 16.7 Status Code 35
- 16.8 Parameter Point Check Table 35

17 SERVICE

- 17.1 Maintenance 36
- 17.2 Changing Motor 36

18 WIRING DIAGRAMS 37

19 CHECKLIST 38

20 DISPOSAL 38

1 SAFETY

1.1 Safety Signs

This is the general warning sign. It is used to alert the user to potential hazards. All safety messages that follow this sign shall be obeyed to avoid possible harm.

⚠ DANGER

Indicates a hazard with a high level of risk which, if not avoided, will result in death or serious injury.

⚠ WARNING

Indicates a hazard with a medium level of risk which, if not avoided, could result in death or serious injury.

⚠ CAUTION

Indicates a hazard with a low level of risk which, if not avoided, could result in minor or moderate injury.

NOTE

A situation that may cause damage to the equipment or loss of property.

Explanation of symbols displayed on the unit

A2L R454B	**DANGER**	This symbol shows that this appliance uses a mild flammable refrigerant. If the refrigerant is leaked and exposed to an external ignition source, there is a risk of fire.
≥ A m²	**WARNING**	This symbol shows that the appliance shall be installed, operated and stored in a room with a floor area not less than the minimum room area.
	CAUTION	This symbol shows that the operation manual should be read carefully.
	CAUTION	This symbol shows that a service personnel should be handling this equipment with reference to the installation manual.
	CAUTION	This symbol shows that information is available such as the operating manual or installation manual.
① = lb oz kg ② = lb oz kg ①+② = lb oz kg	**CAUTION**	This symbol shows that when addition of charge is required by the manufacturer, record the resulting total refrigerant charge for each refrigerating system.

1.2 Safety Precautions

Please read before proceeding

⚠ DANGER

ELECTRICAL HAZARD 380 VOLTS DC

Failure to follow this warning could result in property damage, severe personal injury, or death.

WAIT FIVE (5) MINUTES after disconnecting power prior to touching electrical components as they may hold a dangerous charge of 380 VDC,then verify DC Voltage is less than 42VDC at inverter TEST POINTS P-N.

NOTE

- This document is customer property and is to remain with this unit. Please return to service information pack upon completion of work.
- These instructions do not cover all variations in systems or provide for every possible contingency to be met in connection with the installation.
- Should further information be desired or should particular problems arise which are not covered sufficiently for the purchaser's purposes, the matter should be referred to your installing dealer or local distributor.

NOTE

The manufacturer recommends installing only approved matched indoor and outdoor systems. Some of the benefits of installing approved matched indoor and outdoor split systems are maximum efficiency, optimum performance and the best overall system reliability.

This document contains a wiring diagram.
This is customer property and is to remain with this unit.

⚠ WARNING

This information is intended for use by individuals possessing adequate backgrounds of electrical and mechanical experience. Any attempt to repair air conditioning product may result in personal injury and/or property damage.

⚠ WARNING

HOT SURFACE

May cause minor to severe burning. Failure to follow this Caution could result in property damage or personal injury.
Do not touch the high-temperature components such as compressor .

⚠ DANGER

HAZARDOUS VOLTAGE

Failure to follow this warning could result in property damage, severe personal injury, or death.

Disconnect all electric power, Including remote disconnects before servicing. Follow proper lockout/tagout procedures to ensure the power cannot be inadvertently energized.

⚠ WARNING

REFRIGERANT OIL

These units use R454B refrigerant. Use only R454B approved service equipment. These units use a POE oil that readily absorbs moisture from the atmosphere. To limit this 'hygroscopic" action, the system should remain sealed whenever possible. If a system has been open to the atmosphere for more than 4 hours, the compressor oil must be replaced. Never break a vacuum with air and always change the driers when opening the system for component replacement.

⚠ CAUTION

CONTAINS REFRIGERANT

Failure to follow proper procedures can result in personal illness or injury or severe equipment damage. System contains oil and refrigerant under high pressure. Recover refrigerant to relieve pressure before opening system.

Flammable refrigerant used.

⚠ WARNING

This product can expose you to chemicals including Lead and Lead components, which are known to the State of California to cause cancer and birth defects or other reproductive harm. For more information go to www. P65 Warnings.ca.gov.

⚠ CAUTION

ELETRICAL GROUNDING REQUIRED

Failure to inspect or use proper service tools may result in equipment damage or personal injury. All parts of this product that are capable of conducting electrical current are grounded. If grounding wires, screws, straps, clips, nuts, or washers used to complete a path to ground are removed for service, they must be returned to their original position and properly fastened.

⚠ WARNING

SERVICE VALVES

Failure to follow this warning will result in abrupt release of system charge and may result in personal injury and/or property damage. Extreme caution should be exercised when opening the Liquid Line Service valve. Turn valve stem counterclockwise only until the stem contacts the rolled edge.

⚠ WARNING

BRAZING REQUIRED

Failure to inspect lines or use proper service tools may result in equipment damage or personal injury. If using existing refrigerant lines make certain that all joints are brazed, not soldered.

If refrigerant gas leaks during installation, ventilate the area immediately.

Comply with national gas regulations.

⚠ WARNING

HIGH CURRENT LEAKAGE

Proper grounding is required before connecting electrical supply.
Failure to follow this warning could result in property damage, severe personal injury, or death.

⚠ WARNING

RISK OF FIRE

Mild flammable refrigerant used.

Follow handling instructions carefully in compliance with national regulations.

⚠ DANGER

FIRE, EXPLOSION

Store in a well ventilated room without continuously operating flames or other potential ignition.

⚠ WARNING

Risk of electric shock. Can cause injury or death. Disconnect all remote electric power supplies before servicing.

Risk of fire mild. Flammable refrigerant used. To be repaired only by trained service personnel. Do not puncture refrigerant tubing.

Risk of fire. Dispose of properly in accordance with federal or local regulations.

Risk of fire. Consult repair manual/owner's guide before attempting to service this product. All safety precautions must be followed.

Risk of fire – auxiliary devices which may be ignition sources shall not be installed in the ductwork, other than auxiliary devices listed for use with the specific appliance. See instructions.

⚠ WARNING

Do not use means to accelerate the defrosting process or to clean, other than those recommended by the manufacturer.

The appliance shall be stored in a room that does not have continuously operating ignition sources (for example: open flames, an operating gas appliance or an operating electric heater).

Do not pierce/puncture refrigerant lines or burn the unit.

Be aware that refrigerants may not contain an odor.

⚠ WARNING

This appliance is not intended for use by persons (including children) with reduced physical, sensory or mental capabilities, or persons who lack experience and knowledge, unless they are supervised or have been given instructions concerning the use of the appliance by a person responsible for their safety.

Children should be supervised to ensure that they do not play with the appliance.

Any person who is involved with working on or opening a refrigerant circuit should hold a current valid certificate from an industry-accredited assessment authority, which authorizes their competence to handle refrigerants safely in accordance with an industry recognized assessment credential.

Servicing shall only be performed as recommended by the equipment manufacturer.

Maintenance and repair requiring the assistance of other skilled personnel shall be carried out under the supervision of a person competent in the use of flammable refrigerants.

Prior to beginning work on systems containing flammable refrigerants, safety checks are necessary to minimize the risk of ignition.

⚠ WARNING

When repairing the refrigerating system, comply with the following precautions prior to conducting work on the system:

– shall be undertaken according to controlled procedures so as to minimize the risk of the presence of flammable gases or vapors while the work is being performed.

– All maintenance staff and others working in the local area shall be instructed on the nature of work being carried out. Work in confined spaces shall be avoided.

– The area shall be checked with an appropriate refrigerant detector prior to and during work, to ensure the technician is aware of potentially toxic or flammable environment.

Ensure that the leak detection equipment being used is suitable for use with all applicable refrigerants, i.e. non-sparking, adequately sealed or intrinsically safe.

– If any brazing/welding is to be conducted on the refrigerating equipment or any associated parts, appropriate fire extinguishing equipment shall be available and easily accessible. Have a dry powder or CO2 fire extinguisher adjacent to the charging area.

– When carrying out work in relation to a refrigerating system that involves exposing any pipe work, no sources of ignition shall be used in such a manner that it may lead to the risk of fire or explosion.

All possible ignition sources, including cigarette smoking, should be kept sufficiently far away from the site of installation, repair, or removal and disposal of the unit, during which refrigerant can possibly be released into the surrounding space. Prior to beginning work, the area around the equipment is to be surveyed to make sure that there are no flammable hazards or ignition risks. “No Smoking” signs shall be clearly displayed.

Ensure that the area is in the open or that it is adequately ventilated before opening the system or conducting any hot work. A degree of ventilation shall continue during the period that the work is carried out. The ventilation should safely disperse any released refrigerant and preferably expel it externally into the surroundings.

Where electrical components are being changed, they shall be fit according to their purpose and to the correct specification. At all times the manufacturer’s maintenance and service guidelines shall be followed. If in doubt, consult the manufacturer’s technical department for assistance. The following checks shall be applied to installations using flammable refrigerants:

– The actual refrigerant charge is in accordance with the room size within which the refrigerant containing parts are installed.

– The ventilation machinery and outlets are operating adequately and are not obstructed.

– If an indirect refrigerating circuit is being used, the secondary circuit shall be checked for the presence of refrigerant.

– Equipment marking must remain visible and legible. Markings and signs that are illegible shall be corrected.

Refrigerating pipe or components are installed in a position where they are unlikely to be exposed to any substances which may corrode refrigerant containing components, unless the components are constructed of materials that are inherently resistant to corrosion or are suitably protected against corrosion.

Repair and maintenance of electrical components shall include initial safety checks and component inspection procedures. If a fault exists that could compromise safety, then no electrical supply shall be connected to the circuit until the fault has been dealt with satisfactorily.

If the fault cannot be corrected immediately but it is necessary to continue operation, an adequate temporary solution shall be used. This shall be reported to the owner of the equipment so that all parties are advised. Initial safety checks shall include:

– That capacitors are discharged: this shall be done in a safe manner to avoid the possibility of sparking.

– That no live electrical components and wiring are exposed while charging, recovering or purging the system.

– That there is continuity of proper grounding.

⚠ WARNING

Sealed electrical components shall be replaced.

Intrinsically safe components must be replaced.

Check that cabling will not be subject to wear, corrosion, excessive pressure, vibration, sharp edges or any other adverse environmental effects. The check shall also take into account the effects of aging or continual vibration from sources such as compressors or fans.

Under no circumstances shall potential sources of ignition be used while searching for or detection of refrigerant leaks. A halide torch (or any other detector using a naked flame) shall not be used.

Electronic leak detectors may be used to detect refrigerant leaks but, in the case of flammable refrigerants, the sensitivity may not be adequate, or may need re-calibration. (Detection equipment shall be calibrated in a refrigerant-free area.) Ensure that the detector is not a potential source of ignition and is suitable for the refrigerant used. Leak detection equipment shall be set at a percentage of the LFL of the refrigerant and shall be calibrated for the refrigerant employed, and the appropriate percentage of gas (25 % maximum) is confirmed.

If a leak is suspected, all naked flames shall be removed/extinguished.

If a leakage of refrigerant which requires brazing is found, all of the refrigerant shall be recovered from the system, or isolated(by means of shut off valves) in a part of the system remote from the leak.

Leak detection fluids are also suitable for use with most refrigerants but the use of detergents containing chlorine shall be avoided as the chlorine may react with the refrigerant and corrode the copper pipe-work.

NOTE：Examples of leak detection fluids are

-bubble method,

When breaking into the refrigerant circuit to make repairs - or for any other purpose -conventional procedures shall be used. However, for flammable refrigerants it is important that best practices be followed, since flammability is a consideration. The following procedure shall be adhered to:

- safely remove refrigerant following local and national regulations.

- evacuate.

-purge the circuit with inert gas.

- evacuate.

- continuously flush or purge with inert gas when using flame to open circuit; and.

- open the circuit.

The refrigerant charge shall be recovered into the correct recovery cylinders if venting is not allowed by local and national codes. For appliances containing flammable refrigerants, the system shall be purged with oxygen-free nitrogen to render the appliance safe for flammable refrigerants. This process might need to be repeated several times. Compressed air or oxygen shall not be used for purging refrigerant systems.

For appliances containing flammable refrigerants, refrigerants purging shall be achieved by breaking the vacuum in the system with oxygen-free nitrogen and continuing to fill until the working pressure is achieved, then venting to atmosphere, and finally pulling down to a vacuum. This process shall be repeated until no refrigerant is within the system .When the final oxygen-free nitrogen charge is used, the system shall be vented down to atmospheric pressure to enable work to take place.

The outlet for the vacuum pump shall not be close to any potential ignition sources, and ventilation shall be available.

Ensure that contamination of different refrigerants does not occur when using charging equipment. Hoses or lines shall be as short as possible to minimise the amount of refrigerant they contain.

When use a refrigerant tank with siphon to add refrigerant, the refrigerant tank should be placed upright. When use a refrigerant tank without siphon to add refrigerant, the refrigerant tank should be placed upside down. Ensure that the refrigeration system is grounded prior to charging the system with refrigerant.

In general, R454B doesn't have a siphon tube or dip tube into tank. For this situation, they must be charged in liquid form to prevent fractionation of the blended refrigerant and that requires the jug to be inverted during charging.

Label the system when charging is complete (if it is not already labeled).

Take extreme care not to overfill the refrigeration system.

Prior to recharging the system, it shall be pressure-tested with the appropriate purging gas. The system shall be leak-tested on completion of charging but prior to commissioning. A follow up leak test shall be carried out prior to leaving the site.

Before carrying out this procedure, it is essential that the technician is completely familiar with the equipment and all its detail. It is recommended that all refrigerants are recovered safely. Prior to the task being carried out, an oil and refrigerant sample shall be taken in case analysis is required prior to re-use of reclaimed refrigerant. It is essential that electrical power is available before the task is commenced.

a) Become familiar with the equipment and its operation.

b) Isolate system electrically.

c) Before attempting the procedure ensure that:

– mechanical handling equipment is available, if required, for handling refrigerant cylinders;

– all personal protective equipment is available and being used correctly;

– the recovery process is supervised at all times by a competent person;

– recovery equipment and cylinders conform to the appropriate standards.

d) Pump down refrigerant system, if possible.

e) If a vacuum is not possible, make a manifold so that refrigerant can be removed from various parts of the system.

f) Make sure that the cylinder is situated on the scales before recovery takes place.

g) Start the recovery machine and operate it in accordance with the manufacturer's instructions.

h) Do not overfill cylinders. (No more than 80% volume liquid charge).

i) Do not exceed the maximum working pressure of the cylinder, even temporarily.

j) When the cylinders have been filled correctly and the process has been completed, make sure that the cylinders and the equipment are removed from site promptly and all isolation valves on the equipment are closed off.

k) Recovered refrigerant shall not be charged into another refrigeration system unless it has been cleaned and checked.

Equipment shall be labeled stating that it has been de-commissioned and emptied of refrigerant. The label shall be dated and signed. Ensure that there are labels on the equipment stating the equipment contains flammable refrigerant.

When removing refrigerant from a system, either for servicing or decommissioning, it is recommended that all refrigerants are removed safely.

When transferring refrigerant into cylinders, ensure that only appropriate refrigerant recovery cylinders are employed. Ensure that the correct number of cylinders for holding the total system charge is available. All cylinders to be used are designated for the recovered refrigerant and labelled for that refrigerant (i.e.special cylinders for the recovery of refrigerant). Cylinders shall be complete with pressure-relief valve and associated shut-off valves in good working order. Empty recovery cylinders are evacuated and, if possible, cooled before recovery occurs.

The recovery equipment shall be in good working order with a set of instructions concerning the equipment that is at hand and shall be suitable for the recovery of the flammable refrigerant. If in doubt, the manufacturer should be consulted. In addition, a set of calibrated weighing scales shall be available and in good working order. Hoses shall be complete with leak-free disconnect couplings and in good condition.

The recovered refrigerant shall be processed according to local legislation in the correct recovery cylinder, and the relevant waste transfer note arranged. Do not mix refrigerants in recovery units and especially not in cylinders.

If compressors or compressor oils are to be removed, ensure that they have been evacuated to an acceptable level to make certain that flammable refrigerant does not remain within the lubricant. The compressor body shall not be heated by an open flame or other ignition sources to accelerate this process. When oil is drained from a system, it shall be carried out safely.

Do not use the air conditioner for other purposes.

In order to avoid any quality deterioration, do not use the unit for the cooling of precision instruments, food, plants, animals or works of art.

Before cleaning, be sure to stop the operation, turn the breaker off or unplug the supply cord. Otherwise, electric shock and injury may occur.

In order to avoid electric shock or fire, make sure that an earth ground detector is installed.

Never touch the air outlet or the horizontal blades while the swing flap is in operation.Your fingers may become caught or the unit may break down.

Never put any objects into the air inlet or outlet.

Objects touching the fan at high speed can be dangerous.

Never inspect or service the unit by yourself.

Ask a qualified service person to perform this task.

Do not dispose of this product as unsorted municipal waste. This waste should be collected separately for special treatment.

Do not dispose of electrical appliances as unsorted municipal waste. Use separate collection facilities. Contact your local government for information regarding the connection systems available.

If electrical appliances are disposed of in landfills or dumps, hazardous substances can leak into the groundwater and get into the food chain, harming your health and well-being.

To prevent refrigerant leak, contact your dealer.

When the system is installed and operates in a small room, it is required to maintain the concentration of the refrigerant below the limit, in case a leak occurs. Otherwise, oxygen in the room may be affected, resulting in a serious accident.

The refrigerant in the air conditioner is safe and normally does not leak.

If the refrigerant leaks into the room and comes into contact with the fire of a burner, a heater or a cooker, a harmful gas could be released.

Turn off any combustible heating devices, ventilate the room, and contact the dealer where you purchased the unit.

Do not use the air conditioner until a service person confirms that the refrigerant leak is repaired.

Keep ventilation openings clear of obstruction.

⚠ CAUTION

Be sure the air conditioner is grounded. In order to avoid electric shock, make sure that the unit is grounded and that the ground wire is not connected to a gas or water pipe, lightning conductor or telephone ground wire.

Do not operate the air conditioner with a wet hands. An electric shock may happen.

Do not operate the air conditioner when using a room fumigation-type insecticide. Failure to observe this precaution could cause the chemicals to become deposited in the unit, which could endanger the health of those who are hypersensitive to chemicals. It may also cause the refrigerant sensor to alarm.

To avoid oxygen deficiency, ventilate the room sufficiently if equipment with a burner is used together with the air conditioner.

Arrange the drain hose to ensure smooth drainage. Incomplete drainage may cause damage to the building, furniture, etc.

Never touch the internal parts of the controller. Do not remove the front panel. Some parts inside are dangerous to touch, and machine troubles may occur.

Attention is drawn to the fact that additional transportation regulations may exist with respect to equipment containing flammable gas. The maximum number of pieces of equipment or the configuration of the equipment permitted to be transported together will be determined by the applicable transport regulations.

Signs for similar appliances used in a work area are generally addressed by local regulations and give the minimum requirements for the provision of safety and/or health signs for a work location.

Storage package protection should be constructed such a way that mechanical damage to the equipment inside the package will not cause a leak of the REFRIGERANT CHARGE.

The maximum number of pieces of equipment permitted to be stored together will be determined by local regulations.

All required signs are to be maintained and employers should ensure that employees receive suitable and sufficient instruction and training on the meaning of appropriate safety signs and the actions that need to be taken in connection with these signs.

The effectiveness of signs should not be diminished by too many signs being placed together.

Any pictograms used should be as simple as possible and contain only essential details.

The storage of the appliance should be in accordance with the applicable regulations or instructions, whichever is more stringent.

Do not operate the air conditioner when using a room fumigation - type insecticide. Failure to observe this precaution could cause the chemicals to become deposited in the unit, which could endanger the health of those who are hypersensitive to chemicals.

Do not place appliances which produce open flame in places exposed to the air flow from the unit or under the indoor unit. It may cause incomplete combustion or deformation of the unit due to the heat.

Do not install the air conditioner in a location where flammable gas may leak out. If the gas leaks out and stays around the air conditioner, a fire may break out.

⚠ WARNING

The appliance uses R454B refrigerant.

⚠ WARNING

This outdoor unit must combine the indoor unit with a refrigerant leak detection device.

These instructions are exclusively intended for qualified contractors and authorized installers.

Work on the refrigerant circuit with mild flammable refrigerant in safety group A2L may only be carried out by authorized heating contractors. These heating contractors must be trained in accordance with UL 60335-2-40, Section HH. The certificate of competence from an industry accredited body is required.

Work on electrical equipment may only be carried out by a qualified electrician.

Before initial commissioning, all safety – related points must be checked by the particular certified heating contractors. The system must be commissioned by the system installer or a qualified person authorized by the installer.

NOTE

Recommend to use an aftermarket surge protector.

2 UNIT LOCATION CONSIDERATIONS

⚠ WARNING

Ensure that apparatus is mounted securely.

2.1 Unit Dimensions

Unit Dimensions			
Model	H(inches)	W(inches)	L(inches)
18	24-15/16	23-5/8	23-5/8
24/30	24-15/16	28	28
36	24-15/16	29-1/8	29-1/8
42	33-3/16	28	28
48	29-7/8	28	28
60/61	33-3/16	29-1/8	29-1/8

Table 2-1

The unit's weight value is on the cardboard box.

When mounting the outdoor unit on a roof, be sure the roof will support the unit's weight. Properly selected isolation is recommended to prevent sound or vibration transmission to the building structure.

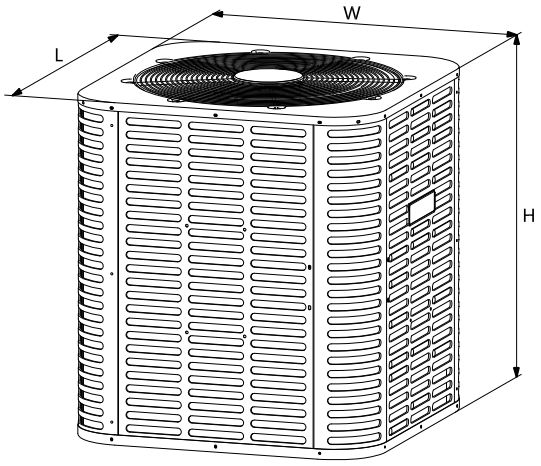

Figure 2-1

2.2 Refrigerant Line Sizes

Models	Suction Line		Liquid Line	
	optional	standard	optional	standard
18/24/30/36	5/8	3/4	5/16	3/8
42/48	3/4	7/8	1/2	
60/61	7/8	1-1/8	1/2	

Table 2-2

NOTE

The suction line for the 60K / 61K models come with a 7/8" service valve and the standard line-set size could require 1-1/8" A copper fitting expander may be needed.

2.3 Required Refrigerant Line Length

Model	Liquid line (inches)	Total equivalent length(Feet)					
		25	50	75	100	125	150
		Maximum vertical length(Feet)					
18	5/16	25	50	40	30	NA	NA
	3/8	25	50	45	40	NA	NA
24	5/16	25	40	30	20	NA	NA
	3/8	25	50	45	40	NA	NA
30	5/16	25	40	40	30	NA	NA
	3/8	25	50	50	50	NA	NA
36	5/16	25	50	40	30	10	NA
	3/8	25	50	60	60	40	30
42	5/16	25	23	4	N/A	NA	NA
	3/8	25	50	43	36	30	24
48	1/2	25	50	56	55	40	30
	3/8	25	46	38	30	22	15
60/61	1/2	25	50	60	60	40	30
	3/8	25	50	56	44	32	20

Table 2-3

Model	Suction (inches)	Total suction line length			
		25	50	100	150
		Coefficient			
18	5/8	1.00	0.97	0.94	N/A
	3/4	1.00	0.98	0.95	N/A
24	5/8	1.00	0.97	0.94	N/A
	3/4	1.00	0.98	0.95	N/A
30	5/8	1.00	0.97	0.94	N/A
	3/4	1.00	0.98	0.96	N/A
36	5/8	1.00	0.97	0.94	0.90
	3/4	1.00	0.99	0.97	0.96
42	3/4	1.00	0.98	0.95	0.93
	7/8	1.00	0.98	0.97	0.96
48	3/4	1.00	0.98	0.95	0.92
	7/8	1.00	0.98	0.97	0.96
60/61	7/8	1.00	0.98	0.94	0.9
	1 1/8	1.00	0.99	0.98	0.97

Table 2-4 Suction line length/size VS capacity multiplier

NOTE

Using suction line larger than shown in chart will result in poor oil return and is not recommended. For example: the system capacity published in AHRI is 17800 Btu/h. This data is based on the AHRI test condition and 25 feet line set with standard suction tube size (3/4" tube). If you need to add the line set more than 25 feet or use the optional suction tube size, you need to recalculate the capacity with the coefficient in the Table 2-4. For 50 feet line and 5/8" suction tube, the capacity will be 17800*0.97=17266 Btu/h.

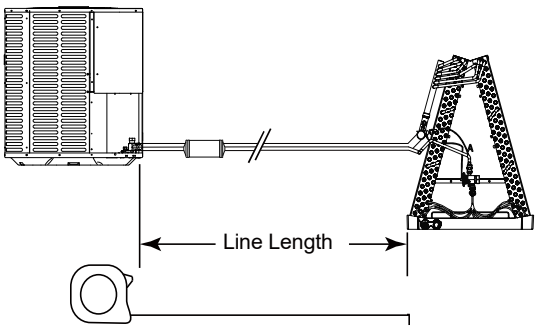

Figure 2-2

NOTE

Total Line Length _ Feet = Total Horizontal Line Length_ Feet + Total Vertical Change(Lift) _ Feet.

2.4 Location Restrictions

⚠ WARNING

The outdoor unit shall be located in a well-ventilated location other than the occupied space, such as in the open air.
For installation of the indoor unit, refer to the corresponding installation and operation manual.
If an indoor unit is installed in an unventilated area, the area shall be so constructed that should any refrigerant leak, it will not stagnate so as to create a fire or explosion hazard.

Ensure the top discharge area is unrestricted for at least 60 inches above the unit.

Do not locate outdoor unit near bedrooms since normal operational sounds may be objectionable.

Position unit to allow adequate space for unobstructed airflow, wiring, refrigerant lines, and serviceability.

Maintain a distance of 24 inches between units.

24 inches clearance must be provided in front of the control box (access panels) and any other side requiring service.

Position unit where water, snow or ice from roof or overhang cannot fall directly on unit.

Position the outdoor unit a minimum of 12" from any wall or surrounding shrubbery to ensure adequate airflow.

See Figure 2-3 and Figure 2-4

Cold climate considerations (heat pump only)

NOTE

Precautions must be taken for units being installed in areas where snow accumulation and prolonged below-freezing temperatures occur.

- Units should be elevated 3-12 inches above the pad or rooftop, depending on local weather. This additional height will allow drainage of snow and ice melted during defrost cycle prior to its refreezing. Ensure that drain holes in unit base pan are not obstructed, preventing drainage of defrost water (Fig. 2-5).
- If possible, avoid locations that are likely to accumulate snow drifts. If not possible, a snow drift barrier should be installed around the unit to prevent a build-up of snow on the sides of the unit.

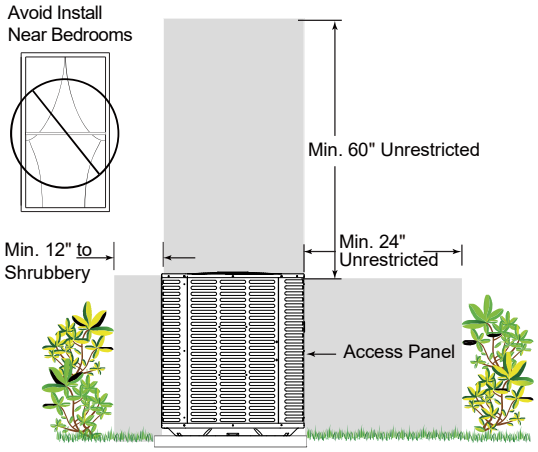

Figure 2-3

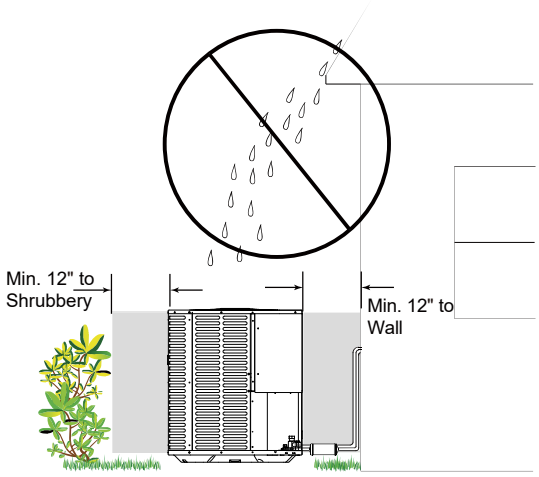

Figure 2-4

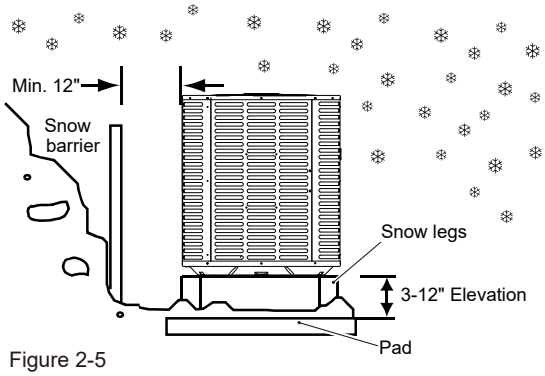

Figure 2-5

2.5 Refrigerant Charge and Room Area Limitations

In UL/CSA 60335-2-40, R454B refrigerant is classified as class A2L, which is mildly flammable. Therefore, R454B refrigerant will limit the area of the rooms being served by the system.

Similarly, the total amount of refrigerant in the system shall be less than or equal to the allowable maximum refrigerant charge. The allowable maximum refrigerant charge depends on the area of the rooms being served by the system.

NOTE

The abbreviations in this section are explained as follows:
Mc: The actual refrigerant charge in the system.
A: the actual room area where the appliance is installed.
Amin: The required minimum room area.
Mmax:The allowable maximum refrigerant charge in a room.
Qmin : The minimum circulation airflow.
Anvmin: The minimum opening area for connected rooms.
TAmin: The required minimum total area of the conditioned space (For appliances serving two or more rooms with an air duct system).
TA: The total area of the conditioned space connected by air ducts. For appliances serving two or more rooms with an air duct system.

2.5.1 The room area calculation requirements

⚠ CAUTION

The space considered shall be any space which contains refrigerant-containing parts or into which refrigerant could be released.
The room area (A) of the smallest, enclosed, occupied space shall be used in the determination of the refrigerant quantity limits.

For determination of room area (A) when used to calculate the refrigerant charge limit, the following shall apply.
The room area (A) shall be defined as the room area enclosed by the projection to the base of the walls, partitions and doors of the space in which the appliance is installed.
Spaces connected by only drop ceilings, ductwork, or similar connections shall not be considered a single space.

Units mounted higher than 70-55/64 inches and spaces divided by partition walls that are no higher than 62-63/64 inches shall be considered a single space.
Rooms on the same floor and connected by an open passageway between the spaces can be considered a single room when determining compliance to Amin, if the passageway complies with all of the following.
1) It is a permanent opening.
2) It extends to the floor.
3) It is intended for people to walk through.

The area of the connected rooms, on the same floor,connected by permanent opening in the walls and/or doors between occupied spaces, including gaps between the wall and the floor, can be considered a single room when determining compliance to Amin, provided all of the following conditions are met as Figure 2-6.

1) Low level opening
①The opening shall not be less than Anvmin in Table 2-5.
②The area of any openings above 11-13/16 inches from the floor shall not be considered in determining compliance with Anvmin.
③At least 50% of the opening area of Anvmin shall be below 7-7/8 inches from the floor.
④The bottom of the opening is not more than 3-15/16 inches from the floor.
⑤The opening is a permanent opening that cannot be closed.
⑥For openings extending to the floor the height shall not be less than 25/32 inches above the surface of the floor covering.

2) High level opening
①The opening shall not be less than 50% of Anvmin in Table 2-5.
②The opening is a permanent opening that cannot be closed.
③The opening shall be at least 59 inches above the floor.
④The height of the opening is not less than 25/32 inches.

3) Room size requirement
①The room into which refrigerant can leak, plus the connected adjacent room(s) shall have a total area not less than Amin. Amin is shown in Table 2-7.
②The room area in which the unit is installed shall be not less than 20% Amin. Amin is shown in Table 2-7.

NOTE

The requirement for the second opening can be met by drop ceilings, ventilation ducts, or similar arrangements that provide an airflow path between the connected rooms.

The minimum opening for natural ventilation (Anvmin) in connected rooms is related to the room area (A), the actual refrigerant charge of refrigerant in the system (Mc) , and the allowable MAXIMUM REFRIGERANT CHARGE in the system (Mmax), Anvmin can be determined according to Table 2-5.

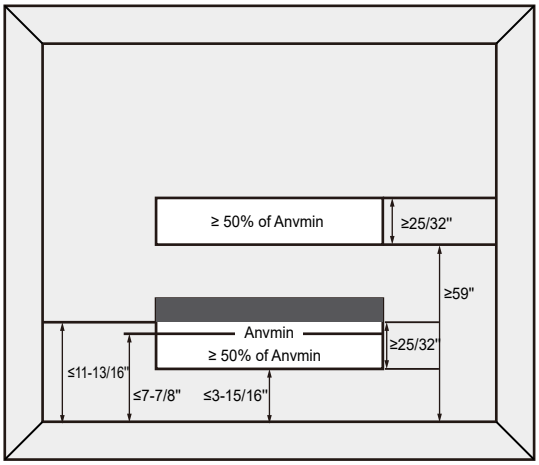

Figure 2-6 Opening conditions for connected rooms

The minimum opening area for connected rooms

A		Mc		Mmax		Anvmin	
ft^2	m^2	lb-oz	kg	lb-oz	kg	ft^2	m^2
100	11	17-3	7.8	6-10	3.0	1.3	0.14
110	12	17-3	7.8	7-5	3.3	1.2	0.13
120	13	17-3	7.8	8-0	3.6	1.1	0.12
130	14	17-3	7.8	8-10	3.9	1.0	0.11
140	16	17-3	7.8	9-5	4.2	1.0	0.11
150	17	17-3	7.8	10-0	4.5	0.9	0.10
160	18	17-3	7.8	10-10	4.8	0.8	0.09
170	19	17-3	7.8	11-5	5.1	0.7	0.08
180	20	17-3	7.8	12-0	5.4	0.6	0.07
190	21	17-3	7.8	12-10	5.7	0.5	0.06
200	22	17-3	7.8	13-5	6.0	0.5	0.06
210	23	17-3	7.8	14-0	6.4	0.4	0.04
220	24	17-3	7.8	14-10	6.6	0.3	0.03
230	26	17-3	7.8	15-5	6.9	0.2	0.02
240	27	17-3	7.8	16-0	7.3	0.1	0.01
250	28	17-3	7.8	16-10	7.5	0.1	0.01
260	29	17-3	7.8	17-5	7.9	0.0	0.00

Table 2-5

Note: Take the Mc=17 lb 3 oz as an example.

For appliances serving two or more rooms with an air duct system, The room area calculation shall be determined based on the total area of the conditioned space (TA) connected by ducts taking into consideration that the circulating airflow distributed to all the rooms by the appliance integral indoor fan will mix and dilute the leaking refrigerant before entering any room.

2.5.2. The allowed maximum refrigerant charge and required minimum room area

If the fan incorporated to an appliance is continuously operated or operation is initiated by a REFRIGERANT DETECTION SYSTEM with a sufficient CIRCULATION AIRFLOW rate, the allowable maximum refrigerant charge (Mmax) and the required minimum room area (Amin/TAmin) is shown in Table 2-6 and Table 2-7.

The allowable maximum refrigerant charge

A/TA		Mmax		M/TA		Mmax	
ft^2	m^2	lb-oz	kg	ft^2	m^2	lb-oz	kg
30	3	2-0	1.8	150	17	10-0	10.0
40	4	2-10	2.6	160	18	10-10	10.6
50	6	3-5	3.3	170	19	11-5	11.3
60	7	4-0	4.0	180	20	12-0	12.0
70	8	4-10	4.6	190	21	12-10	12.6
80	9	5-5	5.3	200	22	13-5	13.3
90	10	6-0	6.0	210	23	14-0	14.0
100	11	6-10	6.6	220	24	14-10	14.6
110	12	7-5	7.3	230	26	15-5	15.3
120	13	8-0	8.0	240	27	16-0	16.0
130	14	8-10	8.6	250	28	16-10	16.6
140	16	9-5	9.3	260	29	17-5	17.3

Table 2-6

The required minimum room area

Mc		Amin/TAmin		Mc		Amin/TAmin	
lb-oz	kg	ft^2	m^2	lb-oz	kg	ft^2	m^2
2-2	1.0	33.1	3.1	10-2	4.6	152.1	14.1
2-9	1.2	39.7	3.7	10-9	4.8	158.7	14.7
3-0	1.4	46.3	4.3	11-0	5.0	165.3	15.4
3-7	1.6	52.9	4.9	11-7	5.2	171.9	16.0
3-15	1.8	59.5	5.5	11-14	5.4	178.5	16.6
4-6	2.0	66.1	6.1	12 -5	5.6	185.1	17.2
4-13	2.2	72.7	6.8	12-12	5.8	191.7	17.8
5-4	2.4	79.3	7.4	13-3	6.0	198.4	18.4
5-11	2.6	86.0	8.0	13-10	6.2	205.0	19.0
6-2	2.8	92.6	8.6	14-1	6.4	211.6	19.7
6-9	3.0	99.2	9.2	14-8	6.6	218.2	20.3
7-0	3.2	105.8	9.8	14-15	6.8	224.8	20.9
7-7	3.4	112.4	10.4	15-6	7.0	231.4	21.5
7-15	3.6	119.0	11.1	15-14	7.2	238.0	22.1
8-6	3.8	125.6	11.7	16-5	7.4	244.6	22.7
8-13	.0	132.2	12.3	16-12	7.6	251.2	23.3
9-4	4.2	138.8	12.9	17-3	7.8	257.9	24.0
9-11	4.4	145.5	13.5				

Table 2-7

The minimum circulation airflow

Mc		Qmin		Mc		Qmin	
lb-oz	kg	CFM	m^3/h	lb-oz	kg	CFM	m^3/h
2-2	1.0	59	100	10-2	4.6	275	467
2-9	1.2	71	121	10-9	4.8	287	488
3-0	1.4	83	141	11-0	5.0	298	506
3-7	1.6	95	161	11-7	5.2	310	527
3-15	1.8	107	182	11-14	5.4	322	547
4-6	2.0	119	202	12 -5	5.6	334	567
4-13	2.2	131	223	12-12	5.8	346	588
5-4	2.4	143	243	13-3	6.0	358	608
5-11	2.6	155	263	13-10	6.2	370	629
6-2	2.8	167	284	14-1	6.4	382	649
6-9	3.0	179	304	14-8	6.6	394	669
7-0	3.2	191	325	14-15	6.8	406	690
7-7	3.4	203	345	15-6	7.0	418	710
7-15	3.6	215	365	15-14	7.2	430	731
8-6	3.8	227	386	16-5	7.4	442	751
8-13	.0	239	406	16-12	7.6	454	771
9-4	4.2	251	426	17-3	7.8	466	792
9-11	4.4	263	447				

Table 2-8

If the altitude of installation is higher than 2000 ft, the required minimum room area follow as Table 2-9.

	Altitude(ft)							
	2001-4000	4001-6000	6001-8000	8001-10000	10001-12000	12001-14000	14001-15000	above 15000
Charge lb	Minimum Conditioned Space(ft²)							
2	33	35	37	39	42	45	47	49
3	50	53	56	59	63	68	71	73
4	66	70	74	79	85	91	94	98
5	83	88	93	99	106	113	118	122
6	100	105	112	119	127	136	141	147
7	116	123	130	138	148	159	165	171
8	133	140	149	158	169	181	188	196
9	149	158	167	178	190	204	212	220
10	166	175	186	198	211	227	235	245
11	183	193	205	218	232	249	259	269
12	199	211	223	237	254	272	282	294
13	216	228	242	257	275	295	306	318
14	232	246	260	277	296	318	330	343
15	249	263	279	297	317	340	353	367
16	266	281	298	317	338	363	377	392
17	282	298	316	336	359	386	400	416
18	299	316	335	356	380	408	424	440
19	315	333	353	376	402	431	447	465
20	332	351	372	396	423	454	471	489

Table 2-9

⚠ CAUTION

The allowable maximum refrigerant charge of the Table 2-6 or the required minimum room area of the Table 2-7 is available only if the following conditions are met:
Minimum velocity of 3.28ft/s, which is calculated as the indoor unit airflow divided by the nominal face area of the outlet. And the grill area shall not be deducted.
Minimum airflow rate must meet the corresponding values in Table 2-8, which is related to the actual refrigerant charge of the system (Mc).
The R454B refrigerant leakage sensor is configured.

NOTE

The maximum refrigerant limit described above applies to unventilated areas. If adding additional measures, such as areas with mechanical ventilation or natural ventilation, The maximum refrigerant charge can be increased or the minimum room area can be reduced.
The R454B refrigerant leakage sensor is configured for the indoor unit, meets the incorporated circulation airflow requirements, the maximum refrigerant charge or minimum room area can be determined according to Table 2-6 or Table 2-7.

⚠ CAUTION

If the actual room area, air outlet height, and refrigerant charge amount are not reflected in the above table, more severe cases need to be considered according to the data in the Tables 2-5, 2-6, 2-7, 2-8.

- Installation scheme flow chart

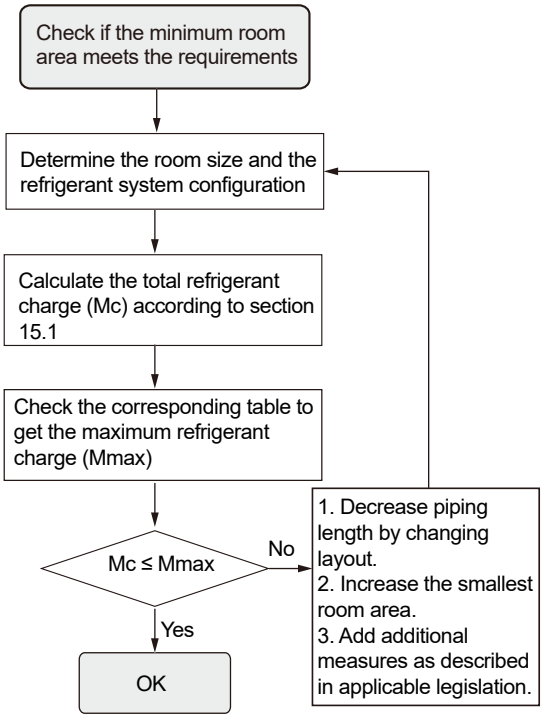

Figure 2-7

3 UNIT PREPARATION

3.1 Pre-installation

STEP 1 - Check for damage and report promptly to the carrier any damage found to the unit (Fig.3-1).

STEP 2 - Instruments must be designed to install/serve R454B equipmens.

- Gauge sets, hoses, refrigerant containers and recovery system must be designed to handle the POE type oils.
- Manifold sets should be 800 psig high side and 250 psig low side.
- All hoses must have a 700 psig service pressure rating.
- Leak detectors should be disigned to detect R454B.
- Recovery equipments (including refrigerant recovery containers) must be specifically designed to handle R454B.
- Do not use R410A/R22 TXV.

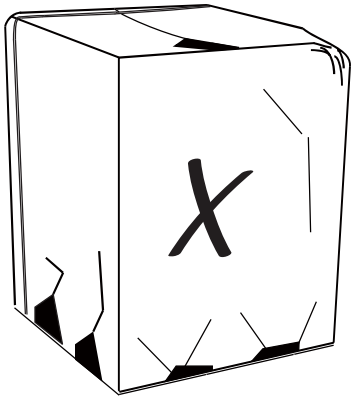

Figure 3-1

⚠ WARNING

The appliance shall be stored so as to prevent mechanical damage from occurring.

4 SETTING UP THE UNIT

4.1 Pad Installation

When installing the unit on a support pad, such as a concrete slab, consider the following:

- The pad must be at least 1-2" larger than the unit on all sides.
- The pad must be separate from any structure.
- The pad must be level.
- The pad must be high enough above grade to allow for drainage.
- The pad location must comply with National, State and Local codes.

NOTE

These instructions are intended to provide a method to tie-down system to concrete slab as a securing procedure for high wind areas. Check Local Codes for tie-down methods and protocols.

⚠ WARNING

The outdoor unit suction pipe service valve and liquid pipe service valve need to be protected. Do not grab them when moving the outdoor unit.

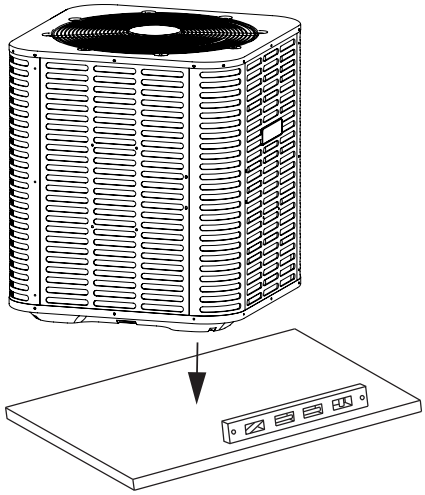

Figure 4-1

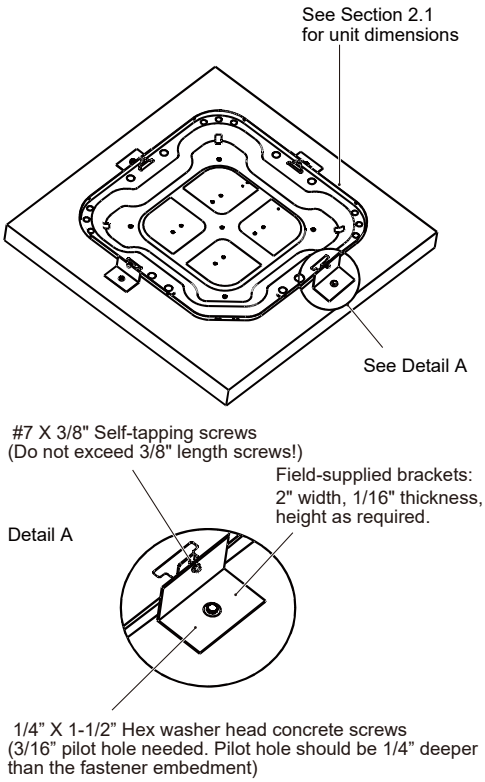

Figure 4-2

5 REFRIGERANT LINE CONSIDERATIONS

5.1 Service Valve Connection Sizes

Models	Suction line connection	Liquid line connection
18/24/30/36	3/4	3/8
42/48/60/61	7/8	

Table 5-1

NOTE

60/61 line sizes are different from the stub tube size and will require an adaptor.

NOTE

The suction line for the 60K / 61K models come with a 7/8" service valve and the standard line-set size could require 1-1/8" A copper fitting expander may be needed.

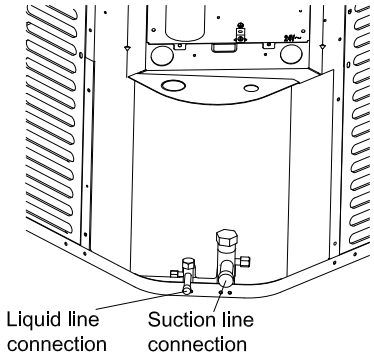

Figure 5-1

5.2 Refrigerant Line Insulation

NOTE

The suction line must always be insulated. DO NOT allow the Liquid Line and Suction Line to come in direct (metal to metal) contact.

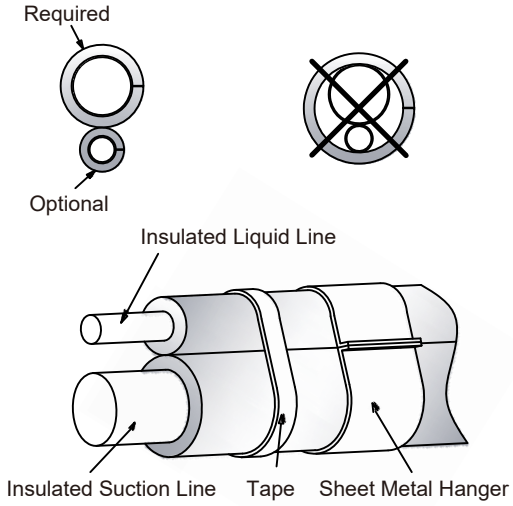

Figure 5-2

5.3 Reuse Existing Refrigerant Lines

⚠ CAUTION

If using existing refrigerant lines make certain that all joints are brazed, not soldered.

For retrofit applications, where the existing refrigerant lines will be used, the following precautions should be taken:

- Ensure that the size of the refrigerant lines is correct. Refer to Section 2.2 and Table 2-2.
- Ensure that the refrigerant pipe length is in the recommended range. Refer to Section 2.3 and Table 2-3.
- Ensure that the refrigerant lines are free of leaks, acid, and oil.
- Using existing lines that have been used with other refrigerants is not recommended.

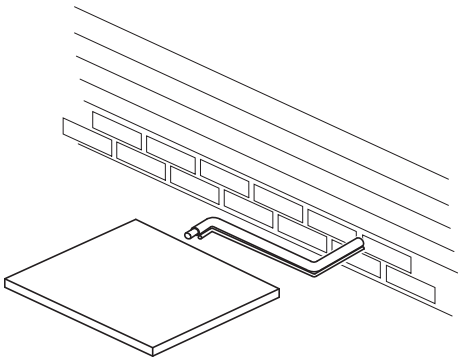

Figure 5-3

6 REFRIGERANT LINE ROUTING

6.1 Precautions

NOTE

Take precautions to prevent noise within the building structure due to vibration transmission from the refrigerant lines. For example:

- When the refrigerant lines have to be fastened to floor joists or other framing in a structure, use isolation type hangers.
- Isolation hangers should also be used when refrigerant lines are run in stud spaces or enclosed ceilings.
- Where the refrigerant lines run through a wall or sill, they should be insulated and isolated.
- Isolate the lines from all ductwork.
- Minimize the number of 90º turns.
- Use PVC piping as a conduit for all underground installations as shown in Figure 6-4 Buried lines should be keep as short as possible.
- The lines should not obstruct service access to the coil, air handling system or filter.
- Care must also be taken to isolate the refrigerant lines to minimize noise transmission from the equipment to the structure.

Comply with National, State, and Local codes when isolating linesets from joists, rafters, walls, or other structural elements.

⚠ WARNING

The pipe-work including piping material, pipe routing, and installation shall include protection from physical damage in operation and service, and be in compliance with national and local codes and standards, such as ASHRAE 15, ASHRAE 15.2, IAPMO Uniform Mechanical Code, ICC International Mechanical Code. Inspection prior to being covered or enclosed,or CSA B52. All field joints shall be accessible for inspection prior to being covered or enclosed.

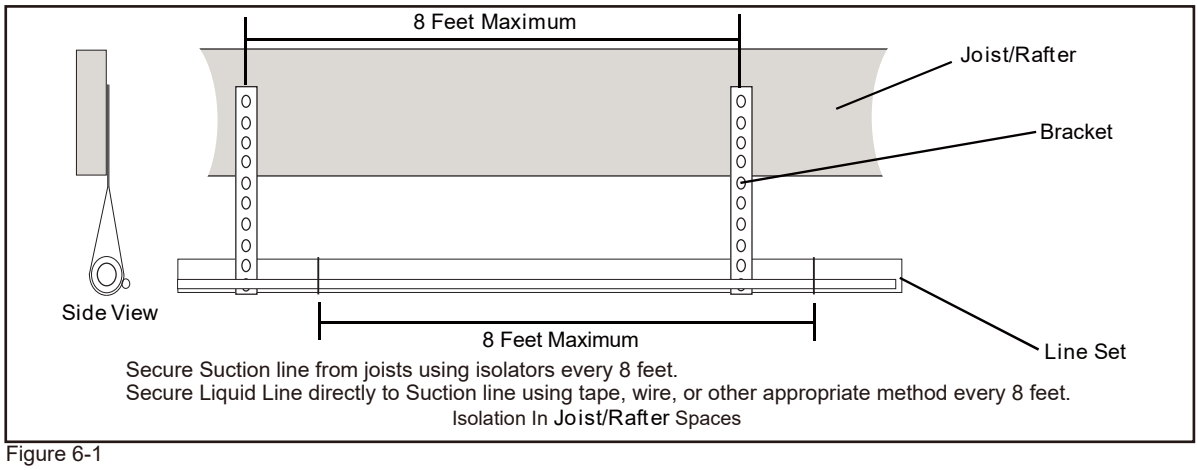

Figure 6-1

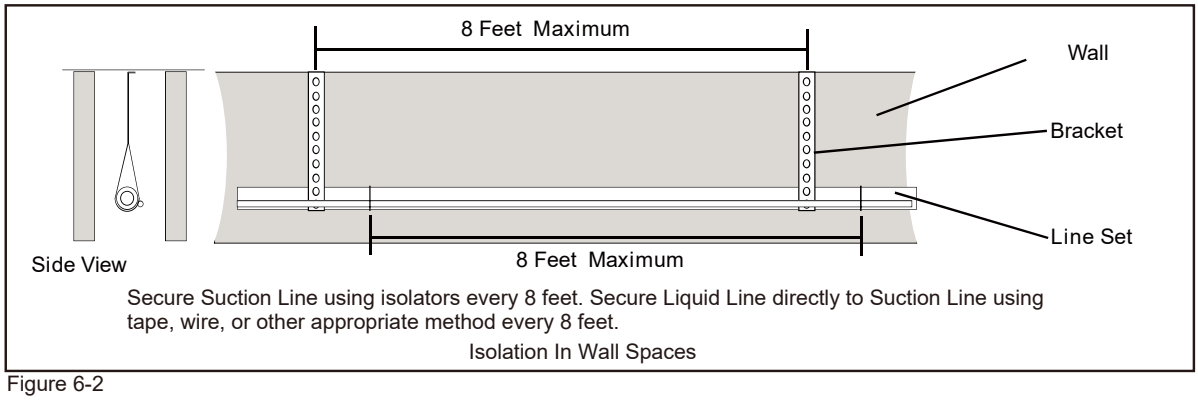

Figure 6-2

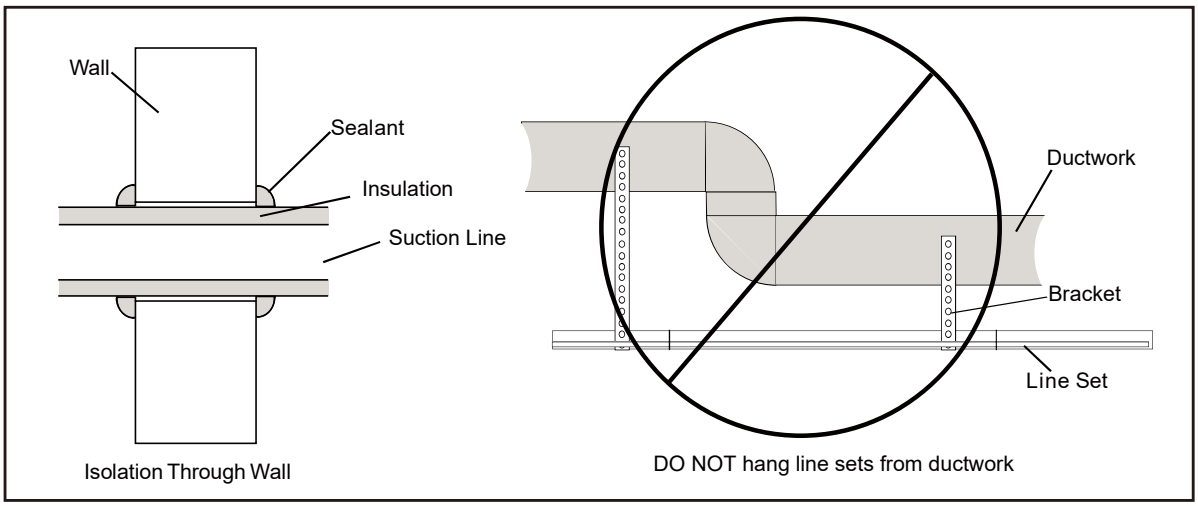

Figure 6-3

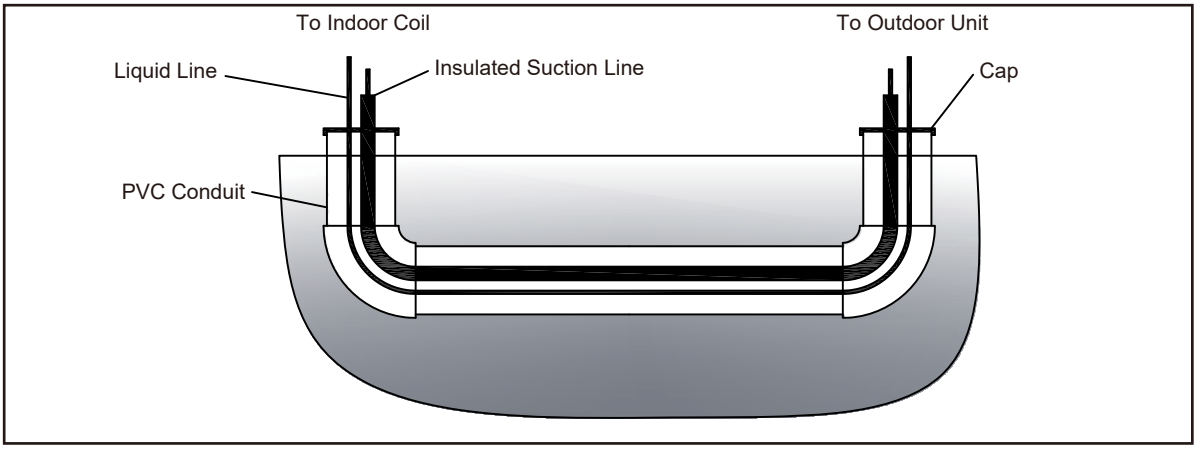

Figure 6-4

7 REFRIGERANT LINE CONNECTION

7.1 Connecting to Refrigerant Lines

⚠ WARNING

Pipe work and installation shall be in compliance with national codes ASHRAE15.

The installation of pipe-work shall be kept to a minimum.

It is recommended to install a filter dryer, the filter drier should be installed in the liquid line between the outdoor unit's liquid line service valve and the indoor coil's metering device. The filter dryer should compatible with R454B refrigerant.

All joints made in the installation between parts of the refrigerating system, with at least one part charged, shall be made in accordance with the following:

— A brazed, welded, or mechanical connection shall be made before opening the valves to permit refrigerant to flow between the refrigerating system parts. A vacuum valve shall be provided to evacuate the interconnecting pipe or any uncharged refrigerating system part.
— Mechanical connectors used indoors shall comply with ISO 14903. When mechanical connectors are reused indoors, sealing parts shall be renewed. When flared joints are reused indoors, the flare part shall be refabricated.
— Refrigerant tubing shall be protected or enclosed to avoid damage.
— Flexible refrigerant connectors (such as connecting lines between the indoor and outdoor unit) that may be displaced during normal operation shall be protected against mechanical damage.

Compliance is checked according to the installation instructions and a trial installation, if necessary.

Field-made refrigerant joints indoors shall be tightness tested. The test method shall have a sensitivity of 5 grams per year of refrigerant or better under a pressure of at least 0.25 times the maximum allowable pressure. No leak shall be detected.

For installations with field applied joints that are exposed in the occupied space, these joints shall be at least one of the following:

— Mechanical joints in compliance with ISO 14903 or UL 207 (U.S. only).
— Welded or brazed joints.
— Joints in enclosures that vent to the unit or to the outside.

Compliance is checked by inspection and tests.

8 REFRIGERANT LINE BRAZING

8.1 Braze the Refrigerant Lines

1. Remove caps or plugs. Use a deburing tool to debur the pipe ends. Clean both internal and external surfaces of the tubing using an emery cloth.

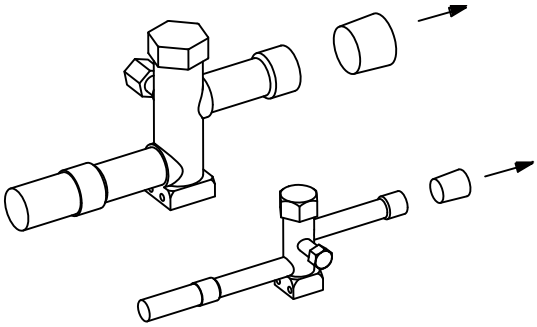

Figure 8-1

2. Remove the pressure tap cap from both service valves.

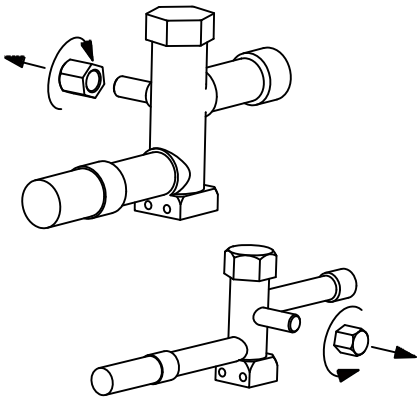

Figure 8-2

3. Purge the refrigerant lines and indoor coil with dry nitrogen.

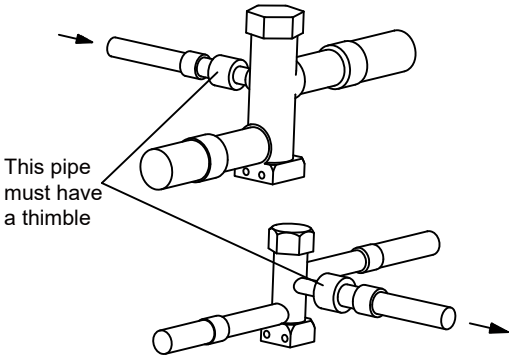

Figure 8-3

4. Wrap a wet rag around the valve body to avoid heat damage and continue the dry nitrogen purge (Fig. 8-4).

   Braze the refrigerant lines to the service valves.

   Check liquid line filter drier's directional flow arrow to confirm correct direction of refrigeration flow (away from outdoor unit and toward evaporator coil) as illustrated. Brazing the filter drier to the Liquid Line.

   Continue the dry nitrogen purge. Do not remove the wet rag until all brazing is completed.

NOTE

Remove the wet rag before stopping the dry nitrogen purge.

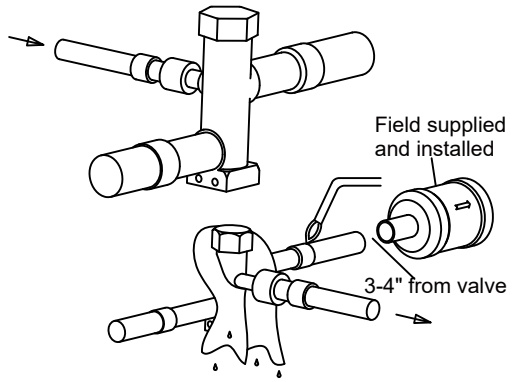

Figure 8-4

5. Replace the pressure tap caps after the service valves have cooled.

NOTE

Do not over tighen (between 40 and 60 inch-lb. maximum).

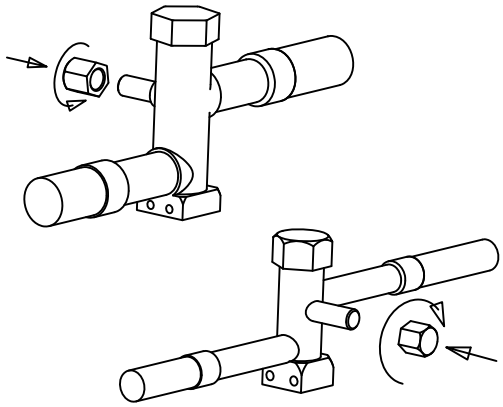

Figure 8-5

9 REFRIGERANT LINE LEAK CHECK

9.1 Check for Leaks

1. Pressurize the refrigerant lines and evaporator coil to 600 psig and hold the pressure for 1 hour using dry nitrogen.

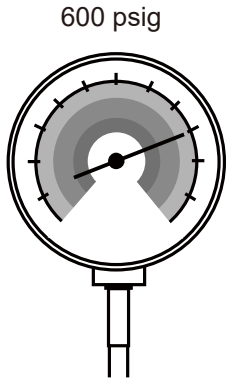

Figure 9-1

2. Check for leaks by using bubbles or refrigerant leak detector at each brazed location.

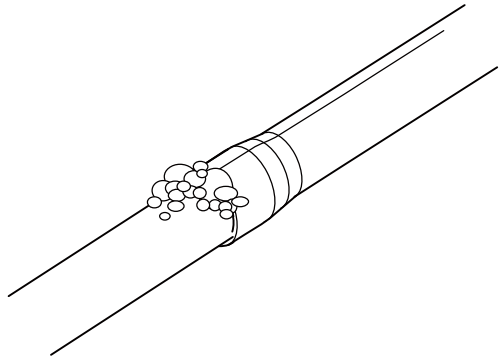

Figure 9-2

Remove nitrogren pressure and repair any leaks before continuing.

⚠ WARNING

After completion of field piping for split systems, the field pipework shall be pressure tested with an inert gas and then vacuum tested prior to refrigerant charging, according to the following requirements.
Entire line set and evaporator coil should hold 600 psig for 1 hour.
Field-made refrigerant joints indoors shall be tightness tested. The test method shall have a sensitivity of 5 grams per year of refrigerant or better under a pressure of at least 0,25 times the maximum allowable pressure. No leak shall be detected.

10 EVACUATION

10.1 Evacuate the Refrigerant Lines and Indoor Coil

NOTE

Do not open the service valves until the refrigerant lines and indoor coil leak check and evacuation are complete.

1. Evacuate until the micron gauge reads no higher than 350 microns, then close off the valve to the vacuum pump.

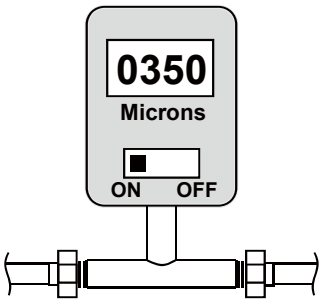

Figure 10-1

2. Observe the micron gauge. Evacuation is complete if the micron gauge does not rise above 500 microns in one (1) minute.

   Once evacuation is complete blank off the vacuum pump and micron gauge, and close the valves on the manifold gauge set.

Figure 10-2

11 SERVICE VALVES

11.1 Open the Service Valves

⚠ WARNING

Extreme caution should be exercised when opening the Liquid Line Service Valve. Turn counterclockwise until the valve stem just touches the rolled edge. No torque is required. Failure to follow this warning will result in abrupt release of system charge and may result in personal injury or property damage.

NOTE

Leak check and evacuation must be completed before opening the service valves. The brazed line set valves should be used for leak checking and vacuuming. Using the separate suction port for this process will result in loss of charge.

The Suction Service Valve must be opened first BEFORE opening the Liquid Service Valve.

1. Remove Service Valve Cap (Fig. 11-1).
2. Fully insert hex wrench into the stem and back out counterclockwise until valve stem just touches the rolled edge (approximately five (5) turns.)
3. Replace the Valve Stem Cap to prevent leaks. Tighten finger tight plus an additional 1/6 turn.
4. Repeat STEPS 1 - 3 for Liquid Service Valve.

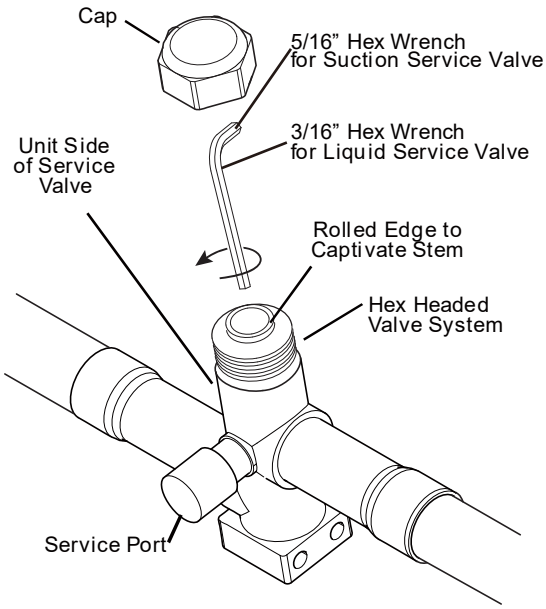

Figure 11-1

12 ELECTRICAL - LOW VOLTAGE

In the U.S.A., wiring must conform with current local, codes and the current National Electric Code (NEC). In Canada, wiring must conform with current local codes and the current Canadian Electrical Code (CEC).

⚠ WARNING

Installation and servicing of air conditioning equipment can be hazardous due to internal refrigerant pressure and live electrical components. Only trained and qualified service personnel should install or service this equipment. Installation and service performed by unqualified persons can result in property damage, personal injury, or death.

Risk of electrical shock. Disconnect all remote power supplies before installing or servicing any portion of the system.

Failure to disconnect power supplies can result in property damage, personal injury, or death.

⚠ CAUTION

Conventional 24VAC non-communicating thermostat control wires must be connected reliably and protected by insulation.
The wires unused should be insulated, and the copper wires should not be exposed. Sharp metal edges can cause injury.
When installing the unit, use care to avoid sharp edges. Avoid sharp metal edges for wires to prevent wear, or it may lead to short circuit or electric leakage and cause danger.

NOTE

Electrostatic discharge can affect electronic components. Take care during unit installation and service to protect the unit's electronic controls. Precautions will help to avoid control exposure to electrostatic discharge by putting the unit, the control and the technician at the same electrostatic potential. Touch hand and all tools on an unpainted unit surface before performing any service procedure to neutralize electrostatic charge.

Do not connect the power cords (high voltage) to the conventional 24VAC non-communicating thermostat control wires (low voltage), otherwise it will damage the control board.

Tighten the zip tie after connecting the wires to prevent small animals from entering the electric control box and causing damage.

The conventional 24VAC non-communicating thermostat control wires should be fixed well. Otherwise, the connectors may be loose or the terminal may be damaged when they are pulled.

Power cords and conventional 24VAC non-communicating thermostat control wires must be separated from each other with a distance of more than 2 inches. Otherwise, the communication may be abnormal.

The conventional 24VAC non-communicating thermostat control wires connectors are SELV connection points.

12.1 Low Voltage Maximum Wire Length

Table 12-1 defines the maximum total length of low voltage wiring from the outdoor unit to the indoor unit and to the thermostat.

24 Volts - Wire size	Max. Wire Length
18 AWG	150 Ft.
16 AWG	225 Ft.
14 AWG	300 Ft.

Table 12-1

12.2 Low Voltage Wiring

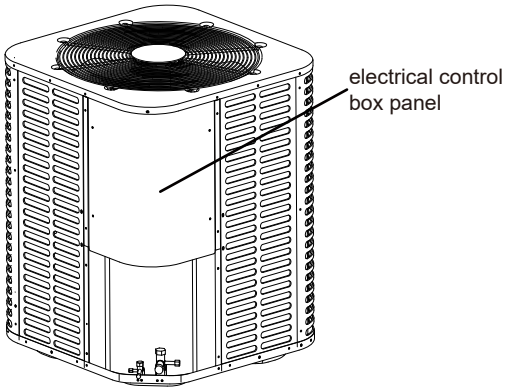

Figure 12-1

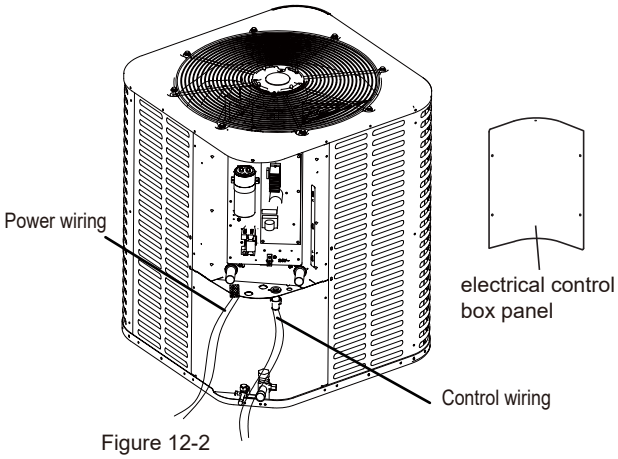

Figure 12-2

⚠ WARNING

Low Voltage line must be connected inside the outdoor unit case through control wiring channel on the right. High Voltage line must be connected through power wiring channel on the left. Mixed channel may result in personal injury.

1. During installation or maintenance, the tie of rubber ring on the electric control box shall not be cut with scissors. It can be untied by pressing the loose buckle. The tightening belt can be reused.

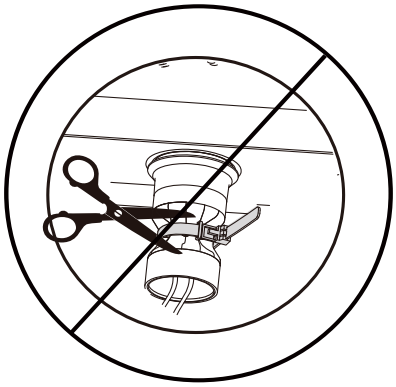

Figure 12-3

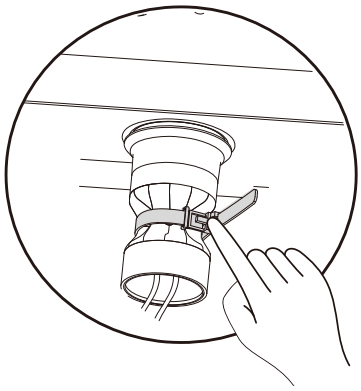

Figure 12-4

2. After installation or maintenance, the tightening belt shall be tightened, can not be loosened or discarded; the control box access panel must be installed and the screws must be tightened.

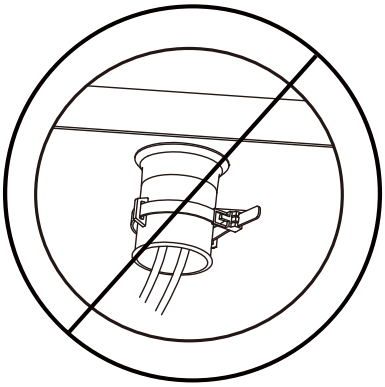

Figure 12-5

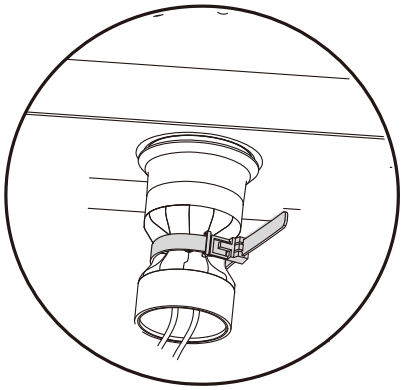

Figure 12-6

For Air Conditioners systems, Y2 only for 61K

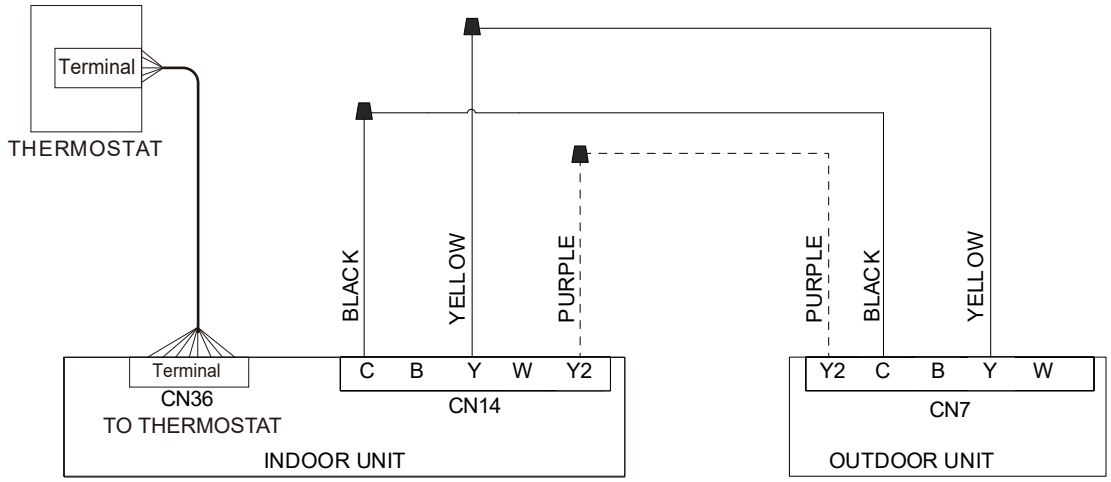

Figure 12-7

NOTE

If there are 2 or more systems (communication) in the same area, make sure the low voltage wires are connected to the right unit that are connected to the same refrigerant line.

The combine indoor unit must have a R454B refrigerant sensor.

The above pictures are for indication, the actual object may be different.

13 ELECTRICAL - HIGH VOLTAGE

In the U.S.A., wiring must conform with current local codes and the current National Electric Code (NEC). In Canada, wiring must conform with current local codes and the current Canadian Electrical Code (CEC).

⚠ WARNING

Installation and servicing of air conditioning equipment can be hazardous due to internal refrigerant pressure and live electrical components. Only trained and qualified service personnel should install or service this equipment. Installation and service performed by unqualified persons can result in property damage, personal injury, or death.

Risk of electrical shock. Disconnect all remote power supplies before installing or servicing any portion of the system. Failure to disconnect power supplies can result in property damage, personal injury, or death.

Fire Hazard. Use of aluminum wire with this product may result in a fire, causing property damage, severe injury or death. Use copper wire only with this product.

Can cause injury or death. Unit must be properly grounded in accordance with national and local codes.

Natural grounding poles embedded in the ground can be used, but do not connect the ground wire to the following locations:

(a) Pipes of flammable or explosive gases, which may lead to an explosion or fire.

(b) Insulated plastic pipes, otherwise there is no

grounding effect.

(c) Telephone line or lightning rod, otherwise it will be dangerous for increasing the ground potential during lightning strikes.

During installation, testing, servicing, and troubleshooting of this product, it may be necessary to work with live electrical components. Failure to follow all electrical safety precautions when exposed to live electrical components could result in death or serious injury.

CAUTION

Sharp metal edges can cause injury. When installing the unit, use care to avoid sharp edges.

Avoid sharp metal edges for wires to prevent wear, or it may lead to short circuit or electric leakage and cause danger.

Wires should be fixed well. Otherwise, the connectors may be loose or the terminal may be damaged when they are pulled.

NOTE

Electrostatic discharge can affect electronic components. Take care during unit installation and service to protect the unit's electronic controls. Precautions will help to avoid control exposure to electrostatic discharge by putting the unit, the control and the technician at the same electrostatic potential. Touch hand and all tools on an unpainted unit surface before performing any service procedure to neutralize electrostatic charge.

Do not add phase junction capacitors, otherwise it may cause serious damage to the product.

Do not start the unit before installing line-sets and opening service valves.

Otherwise, the compressor will be damaged.

13.1 High Voltage Power Supply

The high voltage power supply must match the equipment nameplate (208/230V~, 1PH, 60Hz).

13.2 High Voltage Disconnect Switch and Breaker

Refer to the unit nameplate for minimum circuit ampacity, and maximum fuse or circuit breaker (HACR TYPE per NEC). Install power cords and properly sized disconnect switch and breaker.

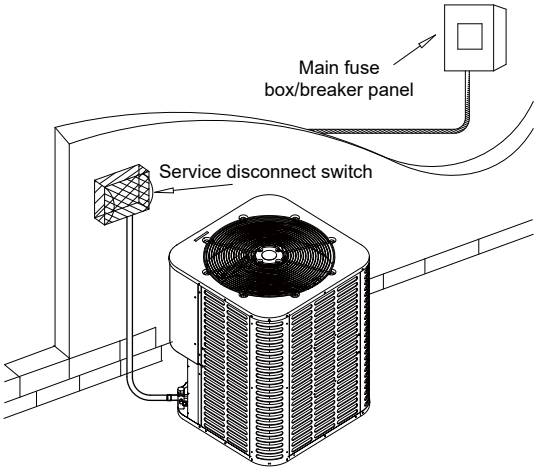

Figure 13-1

13.3 High Voltage Wiring

1. Remove the electrical control box panel. Refer to Figure 13-2.

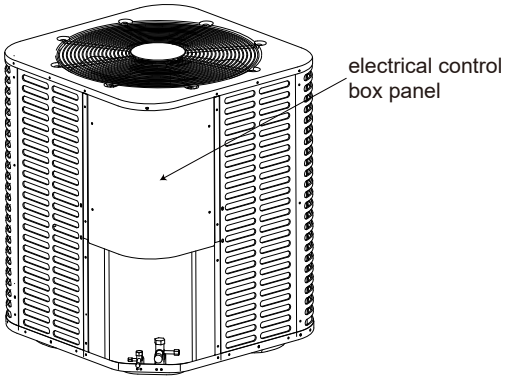

Figure 13-2

2. Firstly thread the power cords (L1, L2) and ground wire through the power cords hole. Secondly connect L1, L2 and ground wire to terminals of the AC contactor properly one by one. Finally fasten the pipe of the power cords and ground wire. Refer to Figure 13-3.

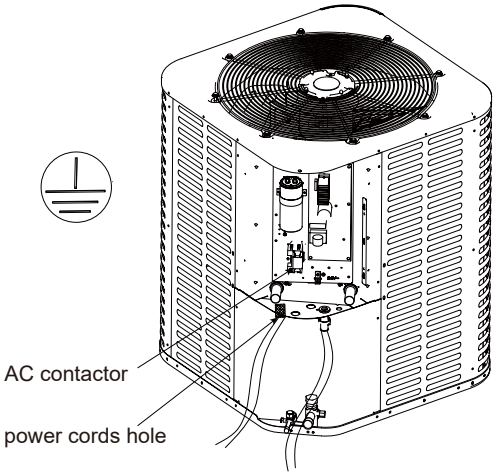

Figure 13-3

NOTE

Refer to the unit wiring diagram located on the inside of the electrical control box panel.

During installation, the ground wire should be longer than the power cords to ensure that the ground wire can be grounded reliably when the fixed device is loose.

The above pictures are for indication, the actual object may be different.

14 START UP

14.1 System Start Up

1. Ensure Sections 7, 8, 9, 10, 11, 12, 13, have been completed. Check the electrical wiring again, and check whether the DIP switch meets the requirements according to the wiring diagram on the electrical control box panel.

2. Set System Thermostat to OFF.

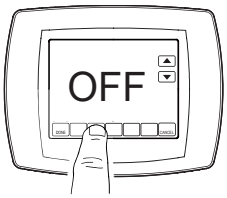

Figure 14-1

3. Check voltage supply at the disconnect switch. The voltage must be within the range listed on the unit nameplate. If not, do not start appliance until the power company has been consulted and the voltage condition corrected.Turn on disconnect to apply power to the indoor and outdoor units.

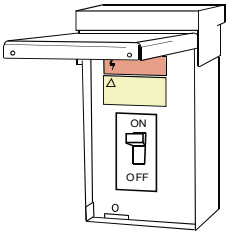

Figure 14-2

4. Wait one (1) hour before starting the unit if compressor crankcase heater is used and the outdoor ambient temperature is below 70 ºF.

Figure 14-3

5. Set system thermostat to ON.

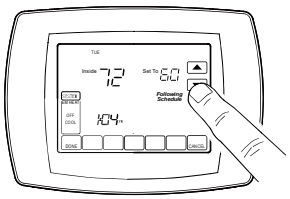

Figure 14-4

15 SYSTEM CHARGE ADJUSTMENT

⚠ WARNING

Micro-channel units cannot withstand pump down.

15.1 Charging: Superheating Charging in Cooling for Piston Match-Ups (above 55 ºF outdoor temp)

1.Check the outdoor ambient temperatures.

When the system matches up with piston, superheating charging (in cooling mode) is the only recommended method of charging above 55 ºF outdoor ambient temperatures.

For outdoor ambient temperatures below 55 ºF , use weigh-in charge method in section 15.3.

NOTE

It is important to return in the spring or summer to accurately charge the system in the cooling mode when outdoor ambient temperature is above 55 ºF.

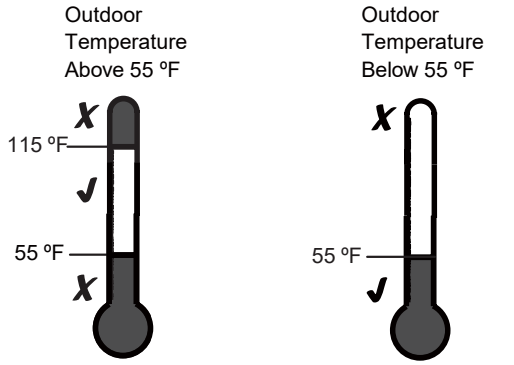

Figure 15-1

For best results the indoor temperature should be kept between 70 ºF to 80 ºF during the install.

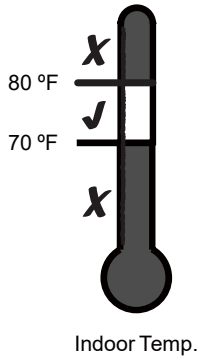

Figure 15-2

2. Ensure Sections 7,8,9,10,11,12,13,14 have been completed.

3. Stabilize the system by operating for a minimum of 20 minutes.

NOTE

At startup, or whenever charge is removed or added, the system must be operated for a minimum of 20 minutes to stabilize before accurate measurements can be made.

Figure 15-3

4. Determine the final superheating value using total Line Length and Lift measured in section 5.3 and the Tables 15-1 to 15-8

Design superheat with piston throttle

Outdoor DB (°F)	Indoor Unit Inlet DB/WB (°F)					
	95/79	90/75	85/71	80/67	75/63	70/58
115	15	13	11	8	5	5
110	16	14	11	9	6	5
105	16	14	11	9	6	5
100	16	14	12	9	6	5
95	16	14	12	9	6	5
90	18	15	13	10	6	5
85	19	16	13	10	6	5
80	17	14	12	9	6	5
75	15	12	10	7	5	5
70	14	11	8	6	5	5
65	12	10	6	5	5	5
60	12	10	6	5	5	5
55	12	9	6	5	5	5

Table 15-1

18K AC

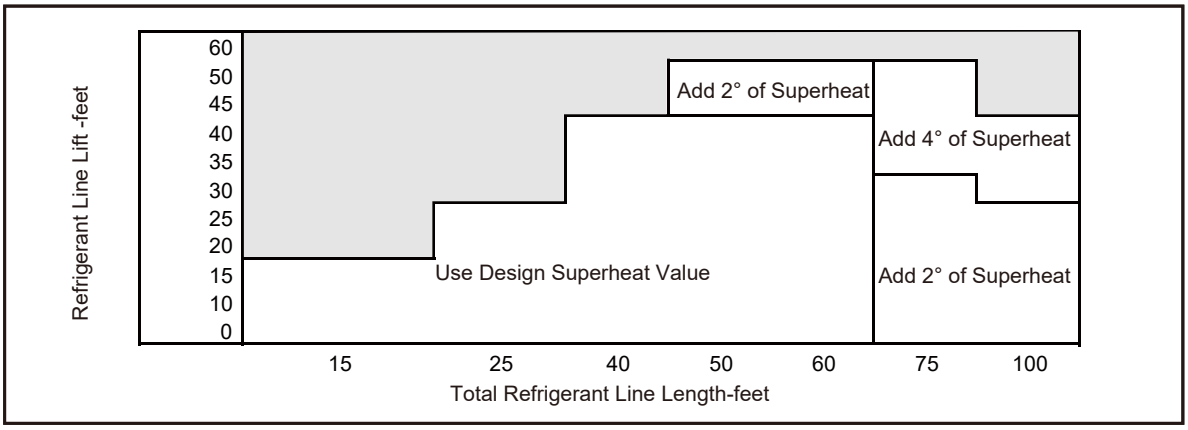

Table 15-2

24K AC

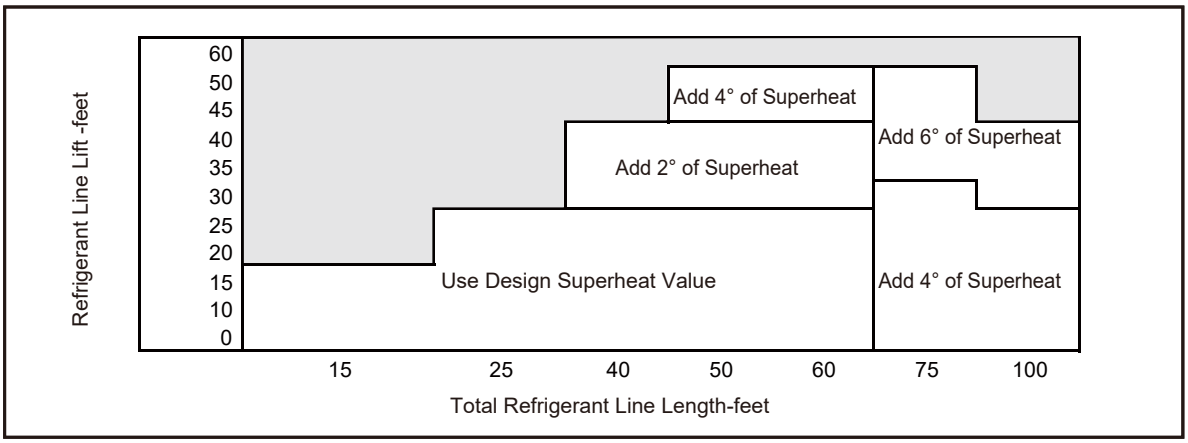

Table 15-3

30K AC

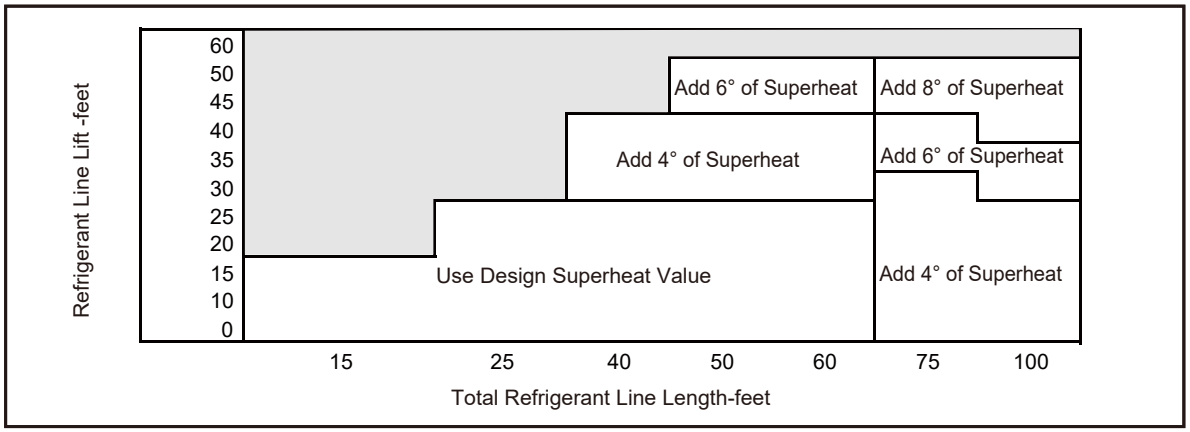

Table 15-4

36K AC

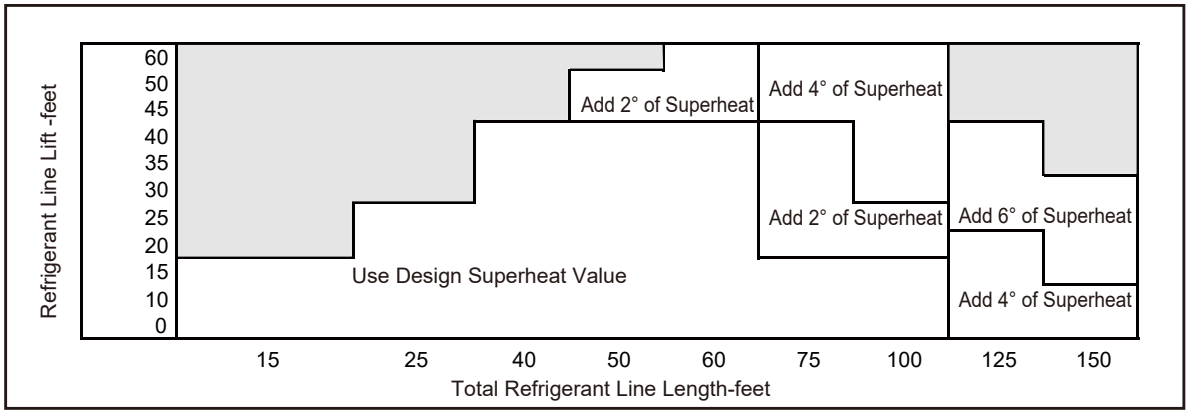

Table 15-5

42K AC

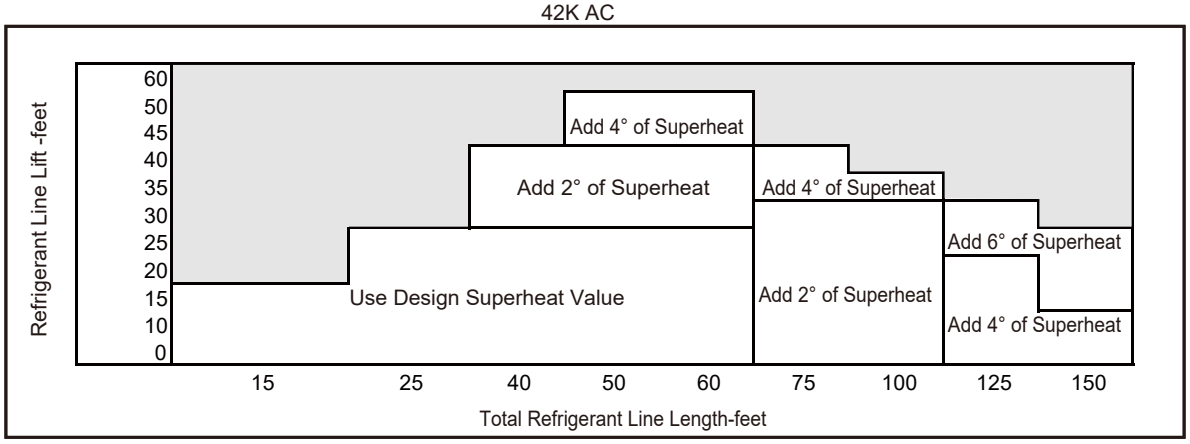

Table 15-6

48K AC

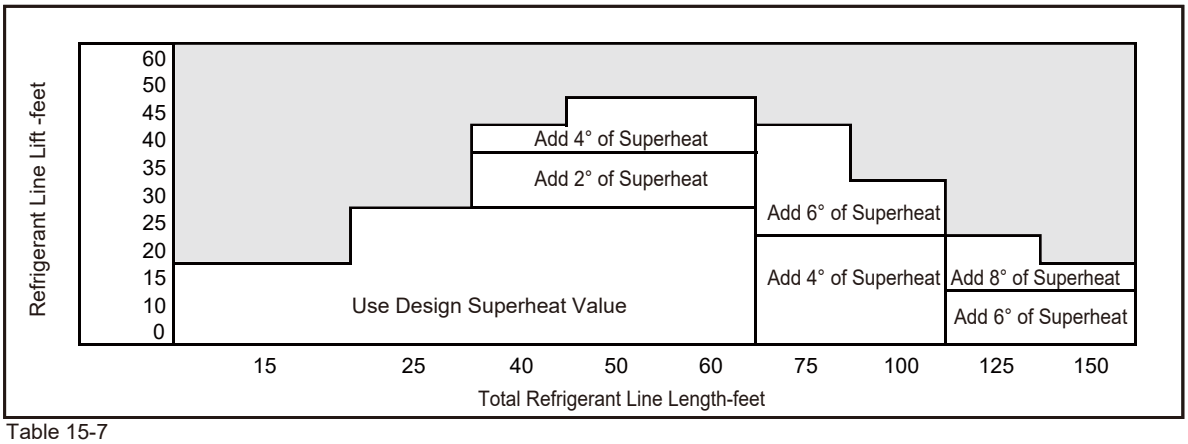

Table 15-7

60K/61K AC

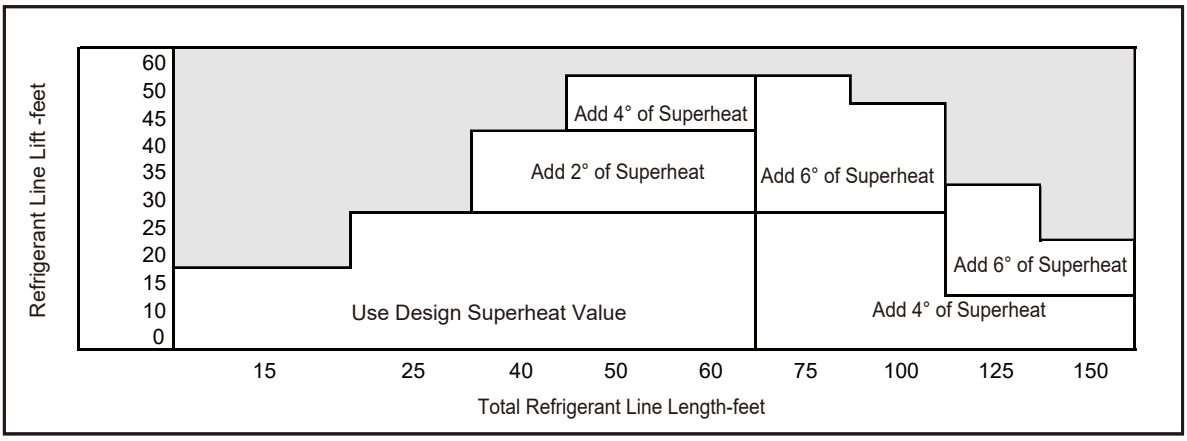

Table 15-8

5. Use the final superheat value, refrigerant temperature and pressure from STEP 4, to determine the proper superheat using Table 15-9

Example: Assume a 12 ºF Final superheat value and suction temp of 58 ºF.

1. Locate 12 ºF final Superheat in Table 15-9.
2. Locate the Suction Temperature (58 ºF) in the left column.
3. The Suction Gauge Pressure should be approximately 120 psig. (This is shown as the intersection of the Final Superheat column and the Suction Temperature row).

Design Superheat Value = _____ºF

Superheat Correction = _____ ºF

Final Superheat Value = _____ ºF

Measured Suction Line Temp. = _____ºF

Measured Suction Line Pressure = _____ psig

Calculate superheating value = _____ºF

R454B Refrigerant Superheat chart							
Suction Temp (°F)	Final Superheat (°F)						
	6	8	10	12	14	16	18
	Suction Gauge Pressure (PSI)						
40	95	91	87	84	80	77	74
42	99	95	91	87	84	80	77
44	103	99	95	91	87	84	80
46	107	103	99	95	91	87	84
48	111	107	103	99	95	91	87
50	116	111	107	103	99	95	91
52	120	116	111	107	103	99	95
54	125	120	116	111	107	103	99
56	129	125	120	116	111	107	103
58	134	129	125	120	116	111	107
60	139	134	129	125	120	116	111
62	144	139	134	129	125	120	116
64	149	144	139	134	129	125	120
66	155	149	144	139	134	129	125
68	160	155	149	144	139	134	129
70	166	160	155	149	144	139	134
72	171	166	160	155	149	144	139

Table 15-9

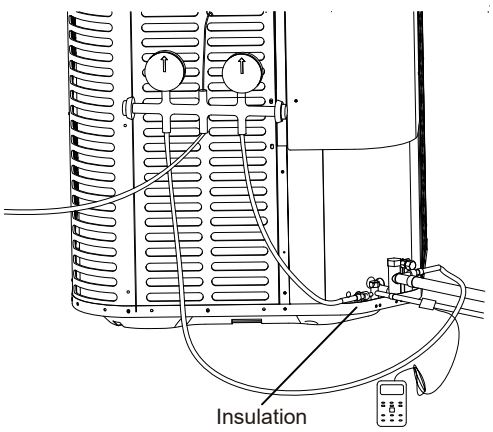

Figure 15-4

6. Adjust refrigerant level to attain proper final superheat.

NOTE

Add refrigerant if the measured superheat is higher than the final superheat value.

- Connect gauges to refrigerant bottle and unit as illustrated (Fig. 15-5).
- Purge all hoses.
- Open bottle.
- Stop adding refrigerant when suction line pressure matches the Refrigerant Charging Chart.

NOTE

Recover refrigerant if the measured superheat is lower than the final superheat value.

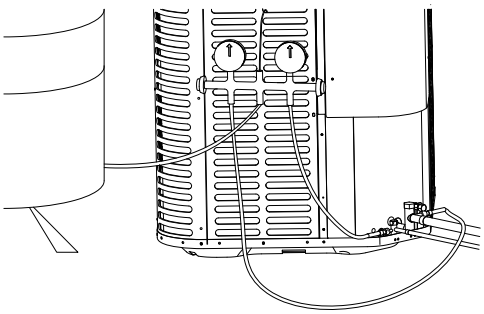

Figure 15-5

7. Stabilize the system.

- Wait 20 minutes for the system condition to stabilize between adjustments.

NOTE

When the suction line pressure match the chart, the system is properly charged.

- Remove gauges.
- Replace service port caps to prevent leaks. Tighten finger tight plus an additional 1/6 turn.

Figure 15-6

8. Record system Information for reference Table 15-10.

   Record system pressures and temperatures after charging is complete.

Description	Value
Outdoor model number	
Measured Outdoor Ambient	°F
Measured Indoor Ambient	°F
Liquid Gauge Pressure	psig
Suction Gauge Pressure	psig
Suction Line Temperature	°F

Table 15-10

15.2 Charging: Subcooling Charging in Cooling for TXV Match-Ups (above 55 ºF outdoor temp)

1. Check the outdoor ambient temperatures.

   When the system matches up with TXV, subcooling charging (in cooling mode) is the only recommended method of charging above 55 ºF outdoor ambient temperatures.

   For outdoor ambient temperatures below 55 ºF use weigh-in charge method in section 15.3.

NOTE

It is important to return in the spring or summer to accurately charge the system in the cooling mode when outdoor ambient temperature is above 55 ºF.

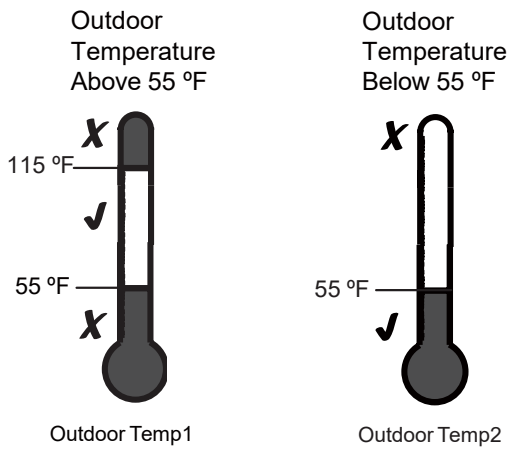

Figure 15-5

For best results, the indoor temperature should be kept between 70 ºF and 80 ºF during the install.

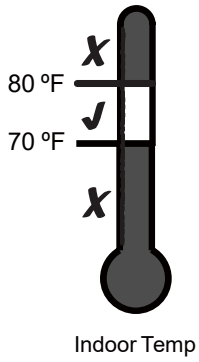

Figure 15-6

2. Ensure Sections 7, 8, 9, 10, 11, 12 ,13 ,14 have been completed.

3. Stabilize the system by operating for a minimum of 20 minutes.

NOTE

At startup, or whenever charge is removed or added, the system must be operated for a minimum of 20 minutes to stabilize before accurate measurements can be made.

Figure 15-7

4. Determine the final subcooling value using the design subcool with TXV throttle table and charging chart corrections table below.

Design subcool with TXV throttle table

Outdoor DB (°F)	Indoor Unit Inlet DB/WB (°F)					
	95/79	90/75	85/71	80/67	75/63	70/58
115	8	9	11	12	14	15
110	7	8	11	12	13	15
105	5	6	11	11	12	14
100	5	6	9	10	11	13
95	5	5	6	9	10	12
90	5	5	6	8	9	11
85	5	5	6	6	8	10
80	5	5	6	6	7	12
75	5	5	5	5	5	14
70	5	5	6	6	8	15
65	5	5	6	6	10	15
60	5	5	6	6	8	13
55	5	5	5	5	5	11

Table 15-11

Determine total refrigerant line length, and height (lift) if indoor section is above the condenser. Use the Table15-12 to calculate any additional subcool required for your specific application.

SUBCOOL CHARGING TABLE CORRECTIONS FOR LINE LENGTH AND RISE

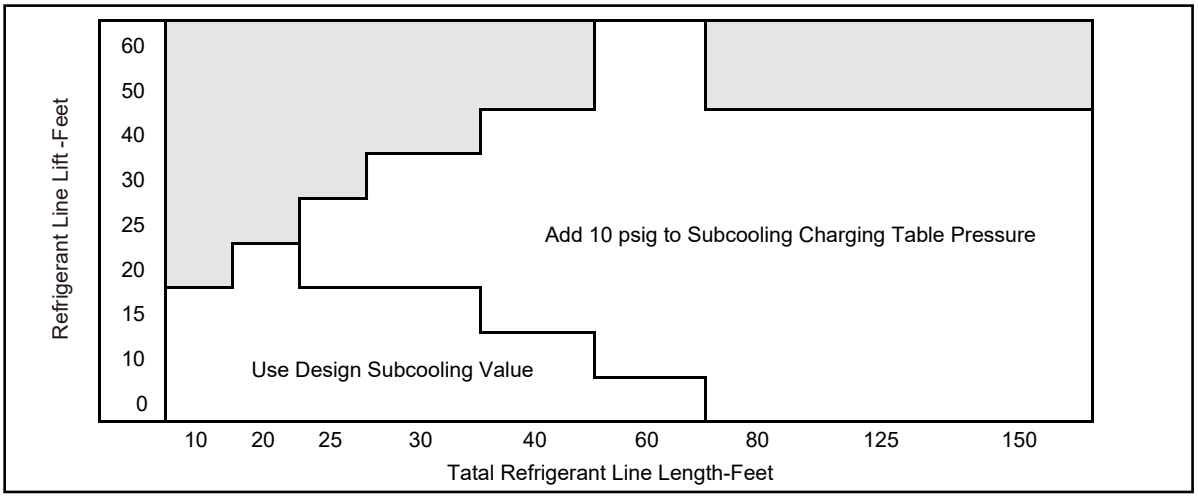

Table 15-12

NOTE

Make sure the superheat is above 5 °F. It is recommended to keep the superheat at 7 °F to 10 °F if TXV is adjustable.

5. Use the final subcooling value, refrigerant temperature and pressure from STEP 4, to determine the proper subcooling using Table 15-13.

Example: Assume a 10 ºF Final subcooling value and liquid temp of 85 ºF.

1) Locate 10 ºF final Subcooling in Table 15-13.

2) Locate the Liquid Temperature (85 ºF) in the left column.

3) The Liquid Gauge Pressure should be approximately 280 psig. (This is shown as the intersection of the Final Subcooling column and the Liquid Temperature row.

Design Subcooling Value = _____ºF

Measured liquid Line Temp. = _____ºF

Measured liquid Line Pressure = _____ psig

liquid Line Pressure Correction = _____ psig

Final Subcooling Value = _____ ºF

Measured Suction Line Temp. = _____ºF

Measured Suction Line Pressure = _____ psig

Calculate superheating value = _____ºF

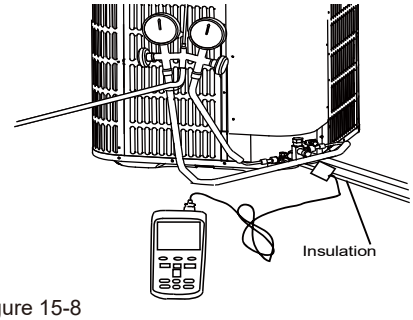

Figure 15-8

NOTE

If calculated subcooling value is lower than the design subcooling value from step 4, please add refrigerant. Repeat steps 3 through 6.

Liquid Temp (°F)	Final Subcooling (°F)							
	6	7	8	9	10	11	12	13
	Liquid Gauge Pressure (psig)							
55	164	167	170	172	175	178	181	184
60	178	181	184	187	191	194	197	200
65	194	197	200	203	206	210	213	217
70	210	213	217	220	223	227	230	234
75	227	230	234	238	241	245	249	252
80	245	249	252	256	260	264	268	272
85	264	268	272	276	280	284	288	292
90	284	288	292	297	301	305	309	314
95	305	309	314	318	323	327	332	336
100	327	332	336	341	346	351	355	360
105	351	355	360	365	370	375	380	385
110	375	380	385	390	396	401	406	412
115	401	406	412	417	422	428	433	439
120	428	433	439	445	450	456	462	468
125	456	462	468	474	480	486	492	498

Table 15-13 R454B Refrigerant chart - Final Subcooling

Suction Temp (°F)	Final Superheat (°F)								
	6	8	10	12	14	16	18	20	22
	Suction Gauge Pressure (psig)								
40	95	91	87	84	80	77	74	70	67
42	99	95	91	87	84	80	77	74	70
44	103	99	95	91	87	84	80	77	74
46	107	103	99	95	91	87	84	80	77
48	111	107	103	99	95	91	87	84	80
50	116	111	107	103	99	95	91	87	84
52	120	116	111	107	103	99	95	91	87
54	125	120	116	111	107	103	99	95	91
56	129	125	120	116	111	107	103	99	95
58	134	129	125	120	116	111	107	103	99
60	139	134	129	125	120	116	111	107	103
62	144	139	134	129	125	120	116	111	107
64	149	144	139	134	129	125	120	116	111
66	155	149	144	139	134	129	125	120	116
68	160	155	149	144	139	134	129	125	120
70	166	160	155	149	144	139	134	129	125
72	171	166	160	155	149	144	139	134	129

Table 15-14 R454B Refrigerant chart - Final Superheat

6. Adjust refrigerant level to attain proper gauge pressure.

NOTE

Add refrigerant if the subcooling reading from Table 15-13 is lower than the designed value from step 4.

- Connect gauges to refrigerant bottle and unit as illustrated (Fig. 15-9).
- Purge all hoses.
- Open tank.
- Stop adding refrigerant when subcooling matches the design value from step 4.

NOTE

When use a refrigerant tank with siphon to add refrigerant, the refrigerant tank should be placed upright. When use a refrigerant tank without siphon to add refrigerant, the refrigerant tank should be placed upside down.

In general, R454B doesn't have a siphon tube or dip tube into tank. For this situation, they must be charged in liquid form to prevent fractionation of the blended refrigerant and that requires the jug to be inverted during charging.

NOTE

Recover refrigerant if the subcooling reading from Table 15-13 is higher than the design value from step 4.

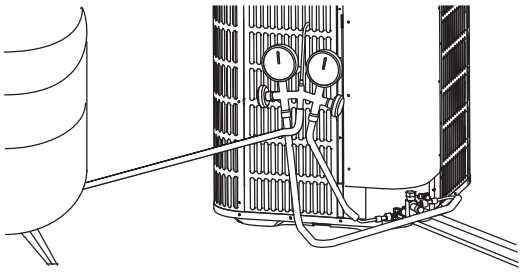

Figure 15-9

7. Stabilize the system.

- Wait 5 minutes for the system condition to stabilize between adjustments.

NOTE

When the subcooling matches the design value from step 4, the system is properly charged.

- Remove gauges.
- Replace service port caps to prevent leaks. Tighten finger tight plus an additional 1/6 turn.

8.Record System Information for reference (Table 15-15). Record system pressures and temperatures after charging is complete.

Description	Value
Outdoor model number	
Measured Outdoor Ambient	°F
Measured Indoor Ambient	°F
Measured Liquid Line Temp	°F
Measured Suction Line Temp	°F
Liquid Gauge Pressure	psig
Suction Gauge Pressure	psig

Table 15-15

15.3 Charging: Weigh-In Method

Weigh-In method can be used for the initial installation, or anytime a system charge is being replaced. Weigh-In Method can also be used when power is not available to the equipment site or operating conditions (indoor/outdoor temperatures) are not in range to verify with the superheating or subcooling charging method.

Model	Factory Charge	Charge multiplier for liquid line length		
		5/16"	3/8"	1/2"
All models	The data on nameplate	0.39 oz/ft	0.59 oz/ft	1.18 oz/ft

Table 15-16

NOTE

The factory charge in the outdoor unit is sufficient for 15 feet of standard size interconnecting liquid line.

NOTE

Please do not add refrigerant from the suction line when the unit is shut down.

New Installations — Calculating additional charge for lineset greater than 15 feet.

1. Total Line Length (ft) = _____(a)
2. Standard Lineset (ft) = ___15___(b)
3. (a) minus (b) = _____(c)
4. Refrigerant Multiplier = _____(d)
5. Refrigerant Adder (c*d) = _____(e)*

*If lineset is less than 15 feet, (e) = 0

Sealed-System Repairs — Calculating total system charge.

1. Total Line Length (ft) = _____(a)
2. Standard Lineset (ft) = ___15___(b)
3. (a) minus (b) = _____(c)
4. Refrigerant Multiplier = _____(d)
5. Refrigerant Adder (c*d) = _____(e)*
6. Factory Charge (nameplate) = _____(f)
7. Total System Charge (e+f) = _____-

*If lineset is less than 15 feet, (e) = 0

NOTE

The only mode approved for validating system charge is while in Cooling Mode. Outdoor Temperature must be between 55 °F and 115 °F with Indoor Temperature kept between 70 °F and 80 °F.

16 SYSTEM OPERATION AND TROUBLESHOOTING

16.1 Protection Function

- T3 = Outdoor Coil Temperature

  T3＞143.6°F, compressor stops working

  T3＜ 125.6°F, compressor restarts working

- T4 = Ambient Temperature

  If 32°F ≤ T4 ≤ 120°F, unit can operate in cooling

- Discharge temperature protection

  Discharge temperature > 239°F, compressor stops working.
  Discharge temperature < 167°F, compressor restarts working.

NOTE

In stand-by status, the compressor will not start in Discharge temperature protection. Within 1 hour, if 5 protection cycles occur, the system will be locked for 30 mins. If this situation occurs 4 times in 3 days, the system will be locked. It will be restore after power cycle.

- High pressure protection

  High pressure > 580 psig, compressor and outdoor fan motor stop working.
  High pressure < 435 psig, compressor and outdoor fan motor restart working (3 minutes delay necessary).

16.2 LED Status

Indicator light description:

The module board has an indicator light, LED 1, which indicates the motor status.

1. When powered on, the LED 1 light will be on for 3 s first, then the software version number is displayed. The number of times the LED 1 light flashes represents the software version number value;

2. When in standby mode, the LED 1 light flashes slowly at 4 Hz, lights up for 2 s, and turns off for 2 s;

3. When running, the LED 1 light is always on;

4. When a fault occurs: the LED 1 light flashes. The flashing LED 1 light flashes with the fault category number as the number of times, then stops for 3 s, and keeps cycling until the fault state is cleared. The shortest fault display is 60 s or the restart is successful. The flashing cycle is 800 ms.

5. When a communication fault occurs, the LED 1 flashes quickly with a cycle of 400 ms until the communication is restored.

16.3 Two-Stage Compressor (61K AC only)

The 61K AC Systems feature a two-stage scroll compressor which is controlled by Y1 and Y2.

- Y1: 24VAC thermostat input for first stage operation of the unit.
- Y2: 24VAC thermostat input/output for second stage operation of the unit.

If the control receives a call for second−stage compressor operation Y2 in cooling mode and the first-stage compressor output is active, the second-stage compressor solenoid output will be energized by the unit control system operation function.

The unit control de−energizes the second-stage compressor solenoid output immediately when the Y2 signal is removed or the first-stage compressor output is de−energized for any reason.

16.4 Temperature Sensor Resistance Table

Temperature °F	Resistance kΩ	Temperature °F	Resistance kΩ	Temperature °F	Resistance kΩ	Temperature °F	Resistance kΩ
-4	106.73	37	29.87	78	10	119	3.69
-3	103.25	38	29.22	79	9.5	120	3.61
-2	99.89	39	28.19	80	9.26	121	3.53
-1	96.65	40	27.39	81	9.03	122	3.45
0	93.53	41	26.61	82	8.81	123	3.38
1	90.53	42	25.85	83	8.59	124	3.3
2	87.62	43	25.12	84	8.38	125	3.23
3	84.83	44	24.42	85	8.17	126	3.16
4	82.13	45	23.73	86	7.97	127	3.1
5	79.52	46	23.07	87	7.78	128	3.03
6	77.01	47	22.42	88	7.59	129	2.96
7	74.58	48	21.8	89	7.4	130	2.9
8	72.24	49	21.2	90	7.22	131	2.84
9	69.98	50	20.61	91	7.05	132	2.78
10	67.8	51	20.04	92	6.88	133	2.72
11	65.69	52	19.49	93	6.72	134	2.67
12	63.65	53	18.96	94	6.56	135	2.61
13	61.68	54	18.44	95	6.4	136	2.56
14	59.78	55	17.94	96	6.25	137	2.5
15	57.95	56	17.45	97	6.1	138	2.45
16	56.17	57	16.98	98	5.96	139	2.4
17	54.46	58	16.52	99	5.82	140	2.35
18	52.8	59	16.08	100	5.68	141	2.3
19	51.2	60	15.65	101	5.55	142	2.25
20	49.65	61	15.23	102	5.42	143	2.21
21	48.16	62	14.83	103	5.3	144	2.16
22	46.71	63	14.43	104	5.18	145	2.12
23	45.31	64	14.05	105	5.06	146	2.08
24	43.95	65	13.68	106	4.94	147	2.03
25	42.64	66	13.32	107	4.83	148	1.99
26	41.38	67	12.97	108	4.72	149	1.95
27	40.15	68	12.64	109	4.61	150	1.91
28	38.97	69	12.31	110	4.51	151	1.88
29	37.82	70	11.99	111	4.41	152	1.84
30	36.71	71	11.68	112	4.31	153	1.8
31	35.64	72	11.38	113	4.21	154	1.77
32	34.6	73	11.09	114	4.12	155	1.73
33	33.59	74	10.8	115	4.03	156	1.7
34	32.61	75	10.53	116	3.94	157	1.66
35	31.67	76	10	117	3.85	158	1.63
36	30.76	77	10	118	3.77	159	1.6

Table 16-1

16.5 Electrical Data Table

Model	18	24	30	36	42	48	60	61
Minimum circuit ampacity (A)	12.1	15.4	17.5	21.8	24.9	29.1	36.8	37.7
Maximum circuit Protector (A)	15	20	25	30	40	45	60	60

Table 16-2

16.6 Error Code Table and Troubleshooting

Code	Description	Possible Reason
E3	T3 sensor fault	T3 sensor is short circuit or open circuit
E4	T4 sensor fault	T4 sensor is short circuit or open circuit
E8	Capacity setting not set	Capacity setting(SW2) isn't set/Program error
E9	R110 resistor or drive chip software fault	Fan is failure/Control board in outdoor unit is failure
P2	LPC protection	Service valves are not open/Poor heat exchange on evaporation side/LPC fault/Charging leakage (low refrigerant)/TXV blocked
P4	Discharge temperature protection	High temperature and overload/Throttle blockage/Charging leakage (low refrigerant)/DTS fault
P5	T3 high-temperature protection	High temperature and overload/Poor heat exchange on condensing side/T3 fault
AL	Ambient temperature limitation	Ambient temperature is out of the range/There are other heat sources around T4
H0	Communication fault between drive chip and main control chip	Program error/Control board in outdoor unit is failure
n1X-n6X	Fan drive fault	Wiring error/Fan is failure

Table 16-3

SYSTEM FAULTS		WHAT TO CHECK MODE	POWER SUPPLY	HIGH VOLTAGE WIRING	O.D. CONTROL BOARD DEF.	I.D. CONTROL BOARD DEF.	COMPRESSR CAPACITOR	O.D. FAN CAPACITOR	I.D. BLOWER CAPACITOR	I.D. BLOWER BOARD DEF.	CONTACTOR CAPACITOR	CONTACTOR CONTACTS	LOW VOLTAGE WIRING	CONTROL TRANSFORMER	THERMOSTAT	CONTACTOR COIL	LOW VOLTAGE FUSE	STUCK COMPRESSOR	INEFFICIENT COMP.	REF. UNDERCHARGE	REF. OVERCHARGE	EXCESSIVE EVAP. LOAD	NONCONDENSABLES	RES. O.D. AIRFLOW	O.D. AIR RECIRCULATION	TXV STUCK OPEN	SUPERHEAT	RES. I.D. AIRFLOW	REF. C/R. RESTRICTIONG	SOV COIL DEFECTIVE	SOV LEAKING	CHECK VALVE LEAKING	LPC SENSOR DEF.	DEFROST CONTROL DEF.	T4 TEMP. SENSOR DEF.	T3 TEMP. SENSOR DEF.	HPC/HGS SENSOR DEF.
REFRIGERANT CIRCUIT																																					
Head Pressure Too High	C																				P	P	S	P	S				S							S	
	H																				P	P	S					P	S								
Head Pressure Too Low	C																		S	P						S	S		S	S		P					
	H																		S	P						S	S		S	S	S	P					
Suction Pressure Too High	C																		S		P	P					S			P		P					
	H																		S								S			P							
Suction Pressure Too Low	C																			P							S	P	S								
	H																			P				S	S		S		S		S						
Liquid Refrig. Floodback (TXV)	C																									P						P					
	H																									P						P					
I.D. Coil Frosting	C																			P				S	S												
	H																																				
Compressor Runs Inadequate or No Cooling/Heating	C																		S	P		S	S				S	P	S	S		S					
	H																		S	P			S				S	P	S	S	S	S					
ELECTRICAL																																					
Compressor & O.D. Fan Won't Start	C	P	P	S				P		S	S	P	S	P	P																						
	H	P	P	S				P			S	P	S		P																		S	S	S	S	S
Compressor Will Not Start But O.D. Fan Runs	C		P			P										P																					
	H		P			P				S				P		P																		S		S	
O.D. Fan Won't Start	C		P				P	P																													
	H		P				P	P																										S			
Compressor Hums But Won't Start	C					P				S						P																					
	H					P				S						P																					
I.D. Blower Won't Start	C	P	P	S					P		S	P	S		S																						
	H	P	P	S					P		S	P	S		S																						
DEFROST																																					
Unit Won't Initiate Defrost	C																																				
	H																														P			P		S	
Defrost Terminates on Time	C																																				
	H																			P														P		S	
Unit Icing Up	C																																				
	H																			P				S	S			S			P			P			

C- Cooling H - Heating P - Primary Causes S - Secondary Causes

Table 16-4

16.7 Status Code

Code	Description
- -	Standby
-C	Cooling mode
-H	Heating mode
FC	Forced cooling mode
dF	Defrosting mode
CH	Abnormal signal

Table 16-5

16.8 Parameter Point Check Table

To display system parameters, press the “Check” button to index through the series of parameters available.

The first time you press the “Check” button, it will display the sequence, and after 1 second it will display the value of the parameter. If you press the “Check” button again, it will display the next sequence.

After 30 seconds on same parameter, the display will revert back to normal status.

NO.	Point check content
1	Unit capacity
2	Operation mode
3	Current fan speed(Actual speed divided by 10, 560R is represented by ‘56.’, 1050R is represented by ‘A5.’)
4	Target fan speed(Actual speed divided by 10, for example, 560R is represented by‘56.’, 1050R is represented by ‘A5.’)
5	T3 temperature(°F)(if the value is less than 100, the actual value is displayed. if over 100, divided by 10, 135 is represented by‘13.’, if it is negative, ‘1.0’ means -10,‘.5’ means -5)
6	T4 temperature(°F)(if the value is less than 100, the actual value is displayed. if over 100, divided by 10, 135 is represented by ‘13.’, if it is negative, ‘1.0’ means -10,‘.5’ means -5)
7	Compressor running time(day) (if the value is less than 100, the actual number of days is displayed. if over 100 and less than 1000, 360 days are represented by ‘36.’, if over 1000, 3600 days are represented by ‘3.6.’)
8	Main control chip software version
9	Drive chip software version
10	Y1 signal state(1=ON, 0=OFF)
11	B signal state(1=ON, 0=OFF)
12	W signal state(1=ON, 0=OFF)
13	Y2 signal state(1=ON, 0=OFF)
14	RV condition (1=ON, 0=OFF)
15	High wind pattern (1=ON, 0=OFF)
16	Last fault code
17	Last second fault code
18	Last third fault code
19	- -

Table 16-6

17 SERVICE

Assist owner with processing Warranty cards and/or online registration.

17.1 Maintenance

Dirt should not be allowed to accumulate on the indoor or outdoor coils or other parts in the air circuit. Clean as often as necessary to keep the unit clean. Use a brush, vacuum cleaner attachment or other suitable means.

The outdoor fan motor is permanently lubricated and does not require periodic oiling.

Refer to the furnace or air handler instructions for filter and blower motor maintenance.

The indoor coil and drain pan should be inspected and cleaned regularly to assure proper drainage.

NOTE

It is unlawful to knowingly vent, release or discharge refrigerant into the open air during repair, service, maintenance or the final disposal of this unit. When the system is functioning properly and the owner has been fully instructed, secure the owner's approval.

17.2 Changing Motor

When motor requires changing, follow the steps below:

STEP 1 - Go into electrical panel, disconnect motor power lines.

Note: Disconnect main power to unit. Severe burns and electrical shock will occur if you do not disconnect main power.

STEP 2 - Remove cover (be careful of motor wires).

STEP 3 - Be sure to place fan cover unit on the ground (Fig.17-1).

Note: Do not place or lean fan blades on ground or against surface.

STEP 4 - Remove fan motor by removing 5/16" nuts from cover.

STEP 5 - Remove fan blade from motor by removing 1/2" nut and place fan on the ground.

STEP 6 - Reverse removal process to reinstall the fan and motor.

Note: When connecting motor wires be sure to check motor direction.

NOTE

Damage will occur to condenser unit if you remove 5/16" nuts prior to cover removal.

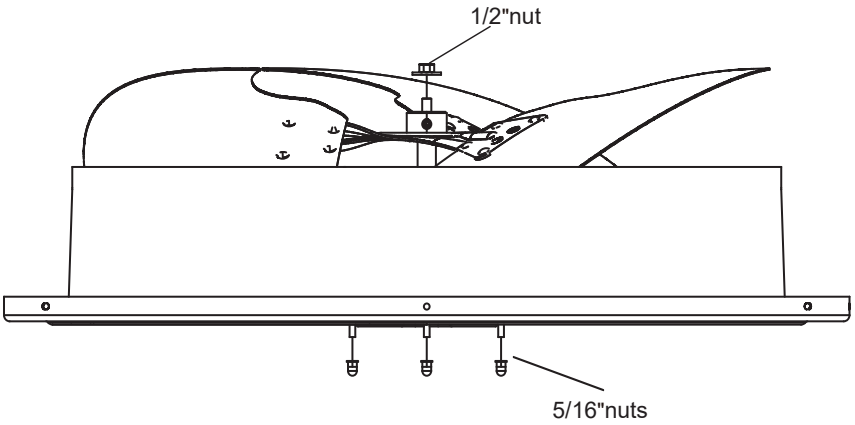

Figure 17-1

18 WIRING DIAGRAMS

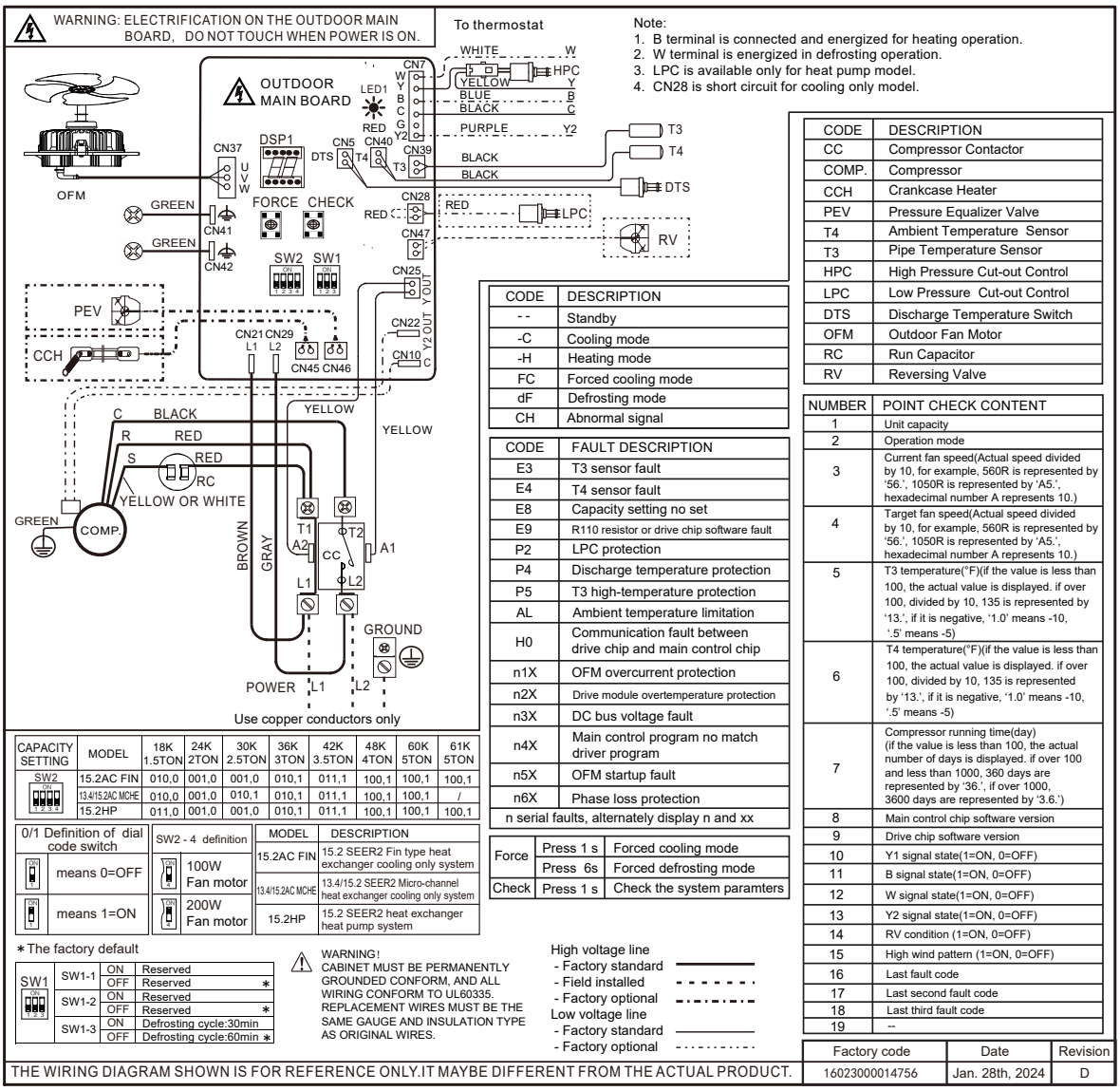

Note:
1. B terminal is connected and energized for heating operation.
2. W terminal is energized in defrosting operation.
3. LPC is available only for heat pump model.
4. CN28 is short circuit for cooling only model.

CODE	DESCRIPTION
CC	Compressor Contactor
COMP.	Compressor
CCH	Crankcase Heater
PEV	Pressure Equalizer Valve
T4	Ambient Temperature Sensor
T3	Pipe Temperature Sensor
HPC	High Pressure Cut-out Control
LPC	Low Pressure Cut-out Control
DTS	Discharge Temperature Switch
OFM	Outdoor Fan Motor
RC	Run Capacitor
RV	Reversing Valve

CODE	DESCRIPTION
- -	Standby
-C	Cooling mode
-H	Heating mode
FC	Forced cooling mode
dF	Defrosting mode
CH	Abnormal signal

CODE	FAULT DESCRIPTION
E3	T3 sensor fault
E4	T4 sensor fault
E8	Capacity setting no set
E9	R110 resistor or drive chip software fault
P2	LPC protection
P4	Discharge temperature protection
P5	T3 high-temperature protection
AL	Ambient temperature limitation
H0	Communication fault between drive chip and main control chip
n1X	OFM overcurrent protection
n2X	Drive module overtemperature protection
n3X	DC bus voltage fault
n4X	Main control program no match driver program
n5X	OFM startup fault
n6X	Phase loss protection
n serial faults, alternately display n and xx	

Force	Press 1 s	Forced cooling mode
	Press 6s	Forced defrosting mode
Check	Press 1 s	Check the system paramters

NUMBER	POINT CHECK CONTENT
1	Unit capacity
2	Operation mode
3	Current fan speed(Actual speed divided by 10, for example, 560R is represented by '56.', 1050R is represented by 'A5.', hexadecimal number A represents 10.)
4	Target fan speed(Actual speed divided by 10, for example, 560R is represented by '56.', 1050R is represented by 'A5.', hexadecimal number A represents 10.)
5	T3 temperature(°F)(if the value is less than 100, the actual value is displayed. if over 100, divided by 10, 135 is represented by '13.', if it is negative, '1.0' means -10, '.5' means -5)
6	T4 temperature(°F)(if the value is less than 100, the actual value is displayed. if over 100, divided by 10, 135 is represented by '13.', if it is negative, '1.0' means -10, '.5' means -5)
7	Compressor running time(day) (if the value is less than 100, the actual number of days is displayed. if over 100 and less than 1000, 360 days are represented by '36.', if over 1000, 3600 days are represented by '3.6.')
8	Main control chip software version
9	Drive chip software version
10	Y1 signal state(1=ON, 0=OFF)
11	B signal state(1=ON, 0=OFF)
12	W signal state(1=ON, 0=OFF)
13	Y2 signal state(1=ON, 0=OFF)
14	RV condition (1=ON, 0=OFF)
15	High wind pattern (1=ON, 0=OFF)
16	Last fault code
17	Last second fault code
18	Last third fault code
19	--

CAPACITY SETTING	MODEL	18K 1.5TON	24K 2TON	30K 2.5TON	36K 3TON	42K 3.5TON	48K 4TON	60K 5TON	61K 5TON
SW2	15.2AC FIN	010,0	001,0	001,0	010,1	011,1	100,1	100,1	100,1
	13.4/15.2AC MCHE	010,0	001,0	010,1	010,1	011,1	100,1	100,1	/
	15.2HP	011,0	001,0	001,0	010,1	011,1	100,1	100,1	100,1

0/1 Definition of dial code switch	
	means 0=OFF
	means 1=ON

SW2 - 4 definition	
	100W Fan motor
	200W Fan motor

MODEL	DESCRIPTION
15.2AC FIN	15.2 SEER2 Fin type heat exchanger cooling only system
13.4/15.2AC MCHE	13.4/15.2 SEER2 Micro-channel heat exchanger cooling only system
15.2HP	15.2 SEER2 heat exchanger heat pump system

∗The factory default

SW1			
	SW1-1	ON	Reserved
		OFF	Reserved ∗
	SW1-2	ON	Reserved
		OFF	Reserved ∗
	SW1-3	ON	Defrosting cycle:30min
		OFF	Defrosting cycle:60min ∗

WARNING!
CABINET MUST BE PERMANENTLY GROUNDED CONFORM, AND ALL WIRING CONFORM TO UL60335. REPLACEMENT WIRES MUST BE THE SAME GAUGE AND INSULATION TYPE AS ORIGINAL WIRES.

High voltage line
- Factory standard
- Field installed
- Factory optional

Low voltage line
- Factory standard
- Factory optional

THE WIRING DIAGRAM SHOWN IS FOR REFERENCE ONLY.IT MAYBE DIFFERENT FROM THE ACTUAL PRODUCT.

Factory code	Date	Revision
16023000014756	Jan. 28th, 2024	D

19 CHECKLIST

Operational and Checkout Procedures

Final phases of this installation are the unit Operational and Checkout Procedures. To obtain proper performance, all units must be operated and charge adjustments made in accordance with procedures found in the Service Facts of the Outdoor Unit.

After installation has been completed, it is recommended that the entire system be checked against the following list:

1. Be sure unit suspension(if used) is secure and that there are no tools or loose debris in or around or on top of the unit ···· [ ]
2. Properly insulate suction lines and fittings ····· [ ]
3. Properly secure and isolate all refrigerant lines ····· [ ]
4. Verify that all electrical connections are tight ····· [ ]
5. Check all duct outlets; they must be open and unrestricted ····· [ ]
6. Check drain lines and be sure all joints are tight ····· [ ]
7. Be sure that a return air filter is installed ····· [ ]
8. Operate complete system in each mode to verify proper performance. Verify operation of supplementary electric heater·· [ ]

20 DISPOSAL

Comply with national regulations.

Components and accessories from the units are not part of ordinary domestic waste.

Complete units, compressors, motors etc. are only to be disposed of via qualified disposal specialists.

This unit uses flammable refrigerant R454B. Please contact the dealer when you want to dispose of this unit. Law requires that the collection, transportation and disposal of refrigerants must conform with the regulations governing the collection and destruction of hydrofluorocarbons.

TwentyThreeC, LLC
800 Beaty Street,
Davidson,NC, 28036
www.oxboxhvac.com

For more information contact
your local dealer (distributor)

Since the manufacturer has a policy of continuous product and product data improvement, it reserves the right to change the design and specification without notice.

©. 2019 TwentyThreeC, LLC